To minimize the likelihood of fatal system errors, take these precautions when removing failed drives:

- Do not remove a degraded drive if any other member of the array is offline (the Online LED is off). In this condition, no other drive in the array can be removed without data loss.

  There are some exceptions:

  — When RAID 1+0 is used, drives are mirrored in pairs. Several drives can be in a failed condition simultaneously (and they can all be replaced simultaneously) without data loss, as long as no two failed drives belong to the same mirrored pair.

  — When RAID ADG is used, two drives can fail simultaneously (and be replaced simultaneously) without data loss.

  — If an online spare has an unlit Online LED (it is offline), the degraded drive can still be replaced.

- Do not remove a second drive from an array until the first failed or missing drive has been replaced **and** the rebuild process is complete. (When the rebuild is complete, the Online LED on the front of the drive stops blinking.)

  There are some exceptions:

  — In RAID ADG configurations, any two drives in the array can be replaced simultaneously.

  — In RAID 1+0 configurations, any drives that are not mirrored to other removed or failed drives can be simultaneously replaced offline without data loss.

Moving Drives and Arrays

Drives can be moved to other ID positions on the same array controller. You may also move a complete array from one controller to another (even if the controllers are on different servers). However, if you combine arrays that were on different controllers into one larger array on a single controller, the data on the arrays is lost.

Contents

Welcome to CoPilot Truck | Mobile! **1**
Safety Warning **2**
Getting Started **3**
Requirements 3
Hardware Setup 4
Connecting Your Smartphone 6
Installing CoPilot **7**
Software Activation 8
Deactivation and License Upgrade 8
Adding a Data Region 9
Region Selection 10
Changing the Voice Option At Any Time 10
Map Download To Your Smartphone **11**
Data Selection Options 13
Data Download Options 19
CoPilot Quick Start Application Download 20
POI Download Options 21
Trip Transfer 22
Importing Custom Places 23
Using CoPilot for Guidance **27**
Address Entry 28
Stop Menu Options 31
Entering a Home Address 34
Entering a Work Address 34
Favorites 35
Intersection 36
Contact Integration 36
Finding Points of Interest 37
Picking Stops from the Map 40
Start Driving! 41
Safety View 41
Map Views 42
Itinerary View 43
Trip Editing 44
Taking a Detour 45
Selective Routing: Avoiding Roads 46
Selective Routing: What Are Waypoints? 46
Getting ETA's and Distances 47
Saving a Current Location 48
Optimizing Your Stop Order 48
Options 49
GPS Options 49
Routing Options 51
Guidance Options 54
Map Options 54
Live Options 55
Upgrade License 55
Traffic Options 55
POI Alerts 56
CoPilot Modes 58
Trip Planning On Your Smartphone **59**
Trip Planning On Your Desktop PC **61**
Reference: CoPilot on Your Desktop 70
CoPilot Live Communications **75**
Real-Time Traffic Information **78**
CoPilot Technical Support **81**
Using Help Files **82**
Software Registration **82**

Downloaded from www.Manualslib.com manuals search engine

Your New Radio

Motorola Talkabout radios operate on Family Radio Service (FRS) designated frequencies. This license-free, short range, two-way radio service was established specifically for family and individual recreational use. You can use your radios anywhere within the United States and other areas listed by the FCC.

Contact the FCC for more information at:

1-888-CALL-FCC (1-888-225-5322)

Or:

http://www.fcc.gov

LED Indicator Light
Indicates radio is on; will be steady red when transmitting.

Battery Meter Indicator
Indicates how much battery charge is left.

Power Button
Turn radio on or off.

Accessory Connector
Used for plugging in optional audio accessories.

Scan Button
Scans frequencies for activity.

Call Button
Calls other radio users.

Light/Lock Button
Illuminates display for 5 seconds. Locks radio to prevent accidental change of settings.

Microphone
Picks up audible transmissions.

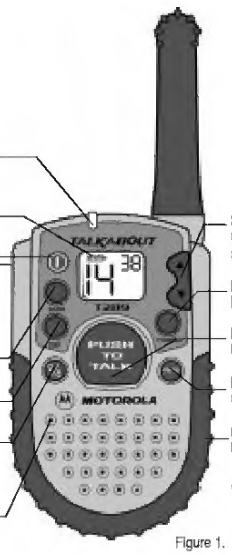

Scroll Buttons
Changes volume and radio settings.

Monitor Button
Monitors frequency activity.

Push-To-Talk (PTT) Button
Used to transmit messages.

Menu Button
Changes function mode.

Charging Connector*
Used for charging battery.

***NiMH Battery Use Only**

Figure 1.

Downloaded from www.Manualslib.com manuals search engine

Step 2 Pull out the front panel.

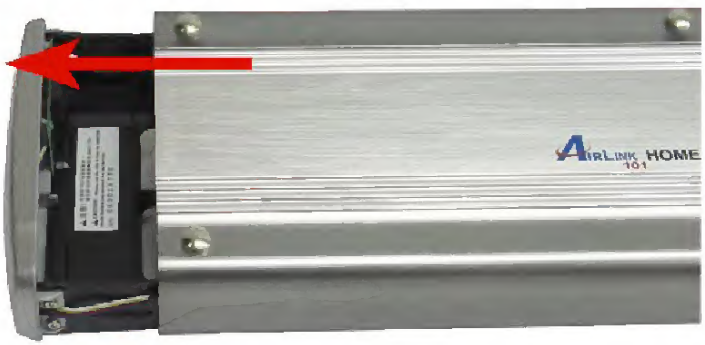

Step 3 Put the 3.5-inch IDE hard disk into the plate, and connect the IDE and power cables to your hard drive.

Downloaded from www.Manualslib.com manuals search engine

60807600.14.09.2004 22/12/04 09:53 Página 10

ESPAÑOL

CAMPANA EXTRACTORA DECORATIVA

Estimado cliente:
Tenemos la certeza que la adquisición de nuestra campana extractora ve a satisfacer plenamente sus necesidades; para ello le rogamos lea atentamente las instrucciones del manual con lo cual obtendrá un resultado óptimo en la utilización de la misma.

IMPORTANTE

Para la obtención de nuestra garantía, será imprescindible presentar la factura de compra de la campana con el certificado de garantía. Sin este requisito la garantía no tendrá validez.

INSTRUCCIONES PARA LA INSTALACIÓN, MANUTENCIÓN Y USO

INDICACIONES GENERALES

- Antes de instalar y usar la campana, asegurar que la tensión (V) y la frecuencia (Hz) indicadas en la placa de características correspondan a la tensión y la frecuencia del lugar de instalación.
- La placa de características y los datos técnicos se encuentran en el interior del producto.

Esta campana se suministra con un tubo telescópico, que permite ajustarlo según la altura de la cocina.

CARACTERÍSTICAS TÉCNICAS

TENSIÓN y FRECUENCIA: 120 V 60 Hz
POTENCIA TOTAL: 570 W
MOTOR A TRES VELOCIDADES: 470 W
LÁMPARA: 2 x 50 W

INSTRUCCIONES DE INSTALACIÓN:

ADVERTENCIA – PARA REDUCIR EL RIESGO DE INCENDIO, DESCARGA ELÉCTRICA O DAÑO PARA LAS PERSONAS, OBSERVE LO SIGUIENTE:

- El trabajo de instalación y el cableado eléctrico deben ser realizados por personas cualificadas, de acuerdo con todos los códigos y normas aplicables, incluyendo una construcción ignífuga.
- Es necesario aire suficiente para la combustión correcta y la extracción de los gases a través del canal de humos (chimenea) del equipo de combustión para evitar el contratiro. Siga las instrucciones del fabricante del equipo de calefacción y las normas de seguridad como las publicadas por la Asociación nacional de protección contra el fuego (NFPA) y la Sociedad americana de ingenieros de calefacción, refrigeración y aire acondicionado (ASHRAE) y las Autoridades reguladoras locales.
- Cuando corte o taladre en la pared o en el techo, no dañe el cableado eléctrico ni otras instalaciones de servicios ocultas.
- Los extractores entubados deben ventilarse siempre al exterior.
- Utilice sólo conductos metálicos.

MONTAJE Y FIJACIÓN A LA PARED.

- Por favor, retirar las piezas de protección de espuma antes de utilizar.
- Conectar la pieza plástica cónica de salida, suministrada con la campana (diámetro 6") a un producto de evacuación conectado directamente con el exterior. (Fig.1)
- Atornillar la caja de conexiones según Fig. 1 con los dos tornillos de 1/8" x 11/16" que se suministran en la bolsa de accesorios.
- Los accesorios necesarios para la instalación de la campana se encuentran en el interior de la misma.
- Realizar los orificios en la pared usando una broca de 6 mm.
- En la bolsa de accesorios que se suministran con la campana, encontrará los tacos y los tornillos necesarios para la fijación de la misma.
- Este ventilador debe montarse a un mínimo de 22 pulgadas sobre la fuente de calor.

CABLEADO

IMPORTANTE: Asegurase que todo el cableado cumple con las leyes locales y que el aparato esté correctamente puesto a tierra.

- Extiende tres cables, dos de alimentación y uno de tierra, desde la caja de empalmes de la campana hasta una caja de empalmes próxima al lugar de instalación. Ver Fig. 1 Ref A
- Utilizando conectores para cables homologados, conecte los conductores de alimentación a los conductores del ventilador: negro con marrón y blanco con azul. Conecte el conductor de toma de tierra (verde o desnudo) al conductor de masa (amarillo/verde) de la caja de distribución del ventilador.

MONTAJE DEL TUBO TELESCÓPICO EMBELLECEDOR:

- Marcar en la pared la posición del soporte E (Fig. 2), según cotas y especificaciones de la plantilla adjunta.
- Efectuar los agujeros en la pared, aplicar los tacos en los orificios y fija el soporte E con los tornillos.
- Poner el tubo A con la parte telescópica S en su interior, asegurándose que la pestaña O esté correctamente alojada en el soporte E (Fig. 2).
- A continuación debe fijarse el soporte G en el extremo superior de la pared asegurándose de que la alineación respecto al tubo telescópico es la correcta. Extender la parte móvil del tubo S hasta alcanzar el soporte G y fijarlo con dicho soporte mediante los dos tornillos laterales. (Fig. 5).

PANEL DE MANDOS

Este panel está situado en la parte frontal de la campana y comprende:

- 3 pulsadores para el control del motor (posición 1°, 2° y 3° velocidad) (ref. D).
- Light switch (Ref. F).

TIMING: To operate the canopy timer, having selected the speed, press the button for two seconds until the LED light blinks. The timer will then work for 15 minutes.
At the end of this time, the motor will stop and the light will go out. If it is still on, and you wish to cancel the timing, press the timer button once and the motor will stop.
IMPORTANT: During an electrostatic discharge (ESD) it is possible that the device will stop working. By switching the device OFF an ON the device will again work as intended. There is no risk and no risk will appear.

MAINTENANCE

- **Cleaning:** Disconnect the power before cleaning or servicing. Clean the external part with a mild, liquid detergent and avoid the use of abrasive cleaning products.
- **Changing the light:** Before changing the light make sure that the hood is not connected.
Remove the grease filter and replace the light with a light bulb no more powerful than that specified in the Technical Characteristics. Place the filter in position.
IMPORTANT: If the halogen lamps need replacing, they must be replaced by lamps with an aluminium reflector, never dichroic lamps, to avoid unnecessary overheating in the lamp holders.

- **Cleaning the grease filter:** Depending on use, and at least once a month, the grease filters should be disassembled (Fig. 3) and (fig. 4) and cleaned in a dishwasher or with hot soapy water. If washed in a dishwasher they should be placed in an upright position to prevent food remains from falling on them. After rinsing and drying, replace the filters by following the steps for disassembly in reverse order.

IMPORTANT SAFETY INSTRUCTIONS:
WARNING: DISCONNECT THE RANGE HOOD FROM POWER SUPPLY BEFORE SERVICING.
WARNING – TO REDUCE THE RISK OF FIRE, ELECTRIC SHOCK OR INJURY TO PERSONS, OBSERVE THE FOLLOWING:

a) Do not use this fan with any solid state speed control device.
b) Use this unit only in the manner intended by the manufacturer. If you have questions, contact the manufacturer.
c) Before servicing or cleaning unit, switch power off at service panel and lock service panel to prevent power from being switched on accidentally. When the service disconnecting means cannot be locked, securely fasten a prominent warning device, such as a tag to the service panel.

CAUTION: FOR GENERAL VENTILATING USE ONLY. DO NOT USE TO EXHAUST HAZARDOUS OR EXPLOSIVE MATERIALS AND VAPORS.

CAUTION: To reduce the risk of fire, use only metal duct work.

WARNING – TO REDUCE THE RISK OF A RANGE TOP GREASE FIRE:

a) Never leave surface units unattended at high settings. Boilovere cause smoking and greasy spillovers that may ignite. Heat oils slowly on low or medium settings.
b) Always turn hood ON when cooking at high heat or when flambeing food (i.e. Crepes Suzette, Cherries Jubilee, Peppercorn Beef Flambé)
c) Clean ventilating fans frequently. Grease should not be allowed to accumulate on fan or filter.
d) Use proper pan size. Always use cookware appropiate for the size of the surface element.

WARNING – TO REDUCE THE RISK OF INJURY TO PERSONS IN THE EVENT OF A RANGE TOP GREASE FIRE, OBSERVE THE FOLLOWING:

a) SMOTHER FLAMES with a close-fitting lid, cookie sheet, or metal tray, then turn off the burner. BE CAREFUL TO PREVENT BURNS. If the flames do not go out immediately, EVACUATE AND CALL THE FIRE DEPARTMENT.
b) NEVER PICK UP A FLAMING PAN – you may be burned.
c) DO NOT USE WATER, including wet dishcloths or towels – a violent steam explosion will result.
d) Use an extinguisher ONLY if:
1. You know you have a Class ABC extinguisher, and you already know how to operate it.
2. The fire is small and contained in the area where it started.
3. The Fire Department is being called.
4. You can fight the fire with your back to an exit.

WARNING – SUFFICIENT AIR IS NEEDED FOR PROPER COMBUSTION AND EXHAUSTING OF GASES THROUGH THE FLUE (CHIMNEY) OF FUEL BURNING EQUIPMENT TO PREVENT BACK DRAFTING. FOLLOW THE HEATING EQUIPMENT MANUFACTURER'S GUIDELINES AND SAFETY STANDARDS SUCH AS THOSE PUBLISHED BY NATIONAL FIRE PROTECTION ASSOCIATION (NFPA), AND THE AMERICAN SOCIETY FOR HEATING, REFRIGERATION AND AIR CONDITIONING ENGINEERS (ASHRAE), AND LOCAL CODE AUTHORITIES.

THE MANUFACTURER DECLINES ALL LIABILITY IN CASES WHERE THE INSTRUCTIONS FOR THE APPROPRIATE INSTALLATION, MAINTENANCE AND USE OF THE EXTRACTOR HOOD ARE NOT OBSERVED.

Downloaded from www.Manualslib.com manuals search engine

Installing Hardware Into an MA8000/EMA12000 Storage Subsystem

Installing Hardware into a Controller Enclosure

The controller enclosure for the MA8000/EMA12000 Storage Subsystem houses the two HSG80 Array Controllers, one cache module for each controller, an environmental monitoring unit (EMU), one or two power supplies, and three dual-speed fans. In addition, the controller enclosure houses the six I/O modules that connect the enclosure's six SCSI buses to up to six disk enclosures.

For detailed instructions on installing hardware components in a controller enclosure, refer to the documentation provided with the MA8000/EMA12000 Storage Subsystem.

Installing Hardware into a Disk Enclosure

Each disk enclosure houses up to 12 or 14 form factor hard disk drives, depending on the number of SCSI buses connected to the enclosure's I/O module. Disk enclosures using a single-bus I/O module can contain up to 12 disk drives. Disk enclosures using both connectors on a dual-bus I/O module can contain up to 14 disk drives (7 per SCSI bus). When you have more than three disk enclosures in your subsystem, they must all use single-bus I/O modules, for a maximum of 72 disk drives in each MA8000/EMA12000 Storage Subsystem.

Each disk enclosure also contains redundant power supplies, an EMU, and two variable-speed blowers. A single-bus or dual-bus I/O module connects each disk enclosure by UltraSCSI cable to one I/O module in the controller enclosure.

For detailed instructions on installing hardware components in a disk enclosure, refer to the documentation provided with the MA8000/EMA12000 Storage Subsystem.

Downloaded from www.Manualslib.com manuals search engine

English

An Acer ezDock II/II+ tour

Note: Illustrations are for reference only. Actual product specifications may vary.

After setting up your Acer ezDock II/II+ and the power supply as illustrated, let us show you around your new Acer ezDock II/II+.

Top view

ezDockII+

ezDock II

Downloaded from www.Manualslib.com manuals search engine

Entry/Exit delay (cont'd)

Exit Alarms

To minimize false alarms sent to the alarm monitoring company, your system may have been programmed for this feature. Ask your installer if Exit Alarm is active for your system.

☐ Exit Alarm Active

Whenever you arm the system, the exit delay begins. If an entry/exit door or interior zone is faulted when the exit delay ends (e.g., exit door left open), the system sounds an alarm and starts the entry delay timer. If you disarm the system before the entry delay ends, the alarm sound stops and the message **CANCELED ALARM** or **CA** is displayed on the keypad, along with a zone number indicating the faulted zone. No message is sent to the alarm monitoring company.

To clear the exit alarm condition, the open zone must be made intact. To clear the display, enter your 4-digit security code plus OFF key.

If you do not disarm the system before the entry delay ends, and an entry/exit door or interior zone is still open, the alarm sound continues and an exit alarm message is sent to the alarm monitoring company. The message **EXIT ALARM** or **EA** is displayed on tbe keypad, along with a zone number indicating the faulted zone. To stop the alarm, the system must be disarmed (by entering your code plus OFF). To clear the display, enter your code plus OFF a second time.

An exit alarm also results if an entry/exit door or interior zone is faulted within 2 minutes after the end of the exit delay.

English

CE

Acer Incorporated
8F, 88, Sec. 1, Xintai 5th Rd., Xizhi
New Taipei City 221, Taiwan

Declaration of Conformity

We,

Acer Incorporated
8F, 88, Sec. 1, Xintai 5th Rd., Xizhi, New Taipei City 221, Taiwan

And,

Acer Italy s.r.l.
Via Lepetit, 40, 20020 Lainate (MI) Italy
Tel: +39-02-939-921 ,Fax: +39-02 9399-2913
www.acer.it

Product:	LCD Monitor
Trade Name:	Acer
Model Number:	**ET430K**
SKU Number:	**ET430K xxxxxx;** ("x" = 0~9, a ~ z, A ~ Z, or blank)

We, Acer Incorporated, hereby declare under our sole responsibility that the product described above is in conformity with the relevant Union harmonization legislations as below Directive and following harmonized standards and/or other relevant standards have been applied:

☒ EMC Directive: **2014/30/EU**

☒ EN 55022:2010+AC:2011 Class B	☒ EN 55024:2010
☒ EN 61000-3-2:2006+A2:2009 Class D	☒ EN 61000-3-3:2013

☒ LVD Directive: **2014/35/EU**

☒ EN 60950-1:2006/A11:2009/A1:2010/A12:2011/A2:2013

☒ RoHS Directive: **2011/65/EU**

☒ EN 50581:2012

☒ ErP Directive: **2009/125/EC**

☒ Regulation (EC) No. 1275/ 2008; EN 50564:2011

Year to begin affixing CE marking: 2016.

RU Jan / Sr. Manager
Acer Incorporated (Taipei, Taiwan)

Sep.01,2016
Date

Downloaded from www.Manualslib.com manuals search engine

AUTOMATIC TUNING OF CHANNELS

Automatic tuning of channels allows you to store each programme automatically.

Step	Press button		Result on screen
1	MENU	Press twice to enter MEMORY main menu.	
2	C / C	Press button repeatedly until AUTO SEARCH is selected.	
3	V	Start automatic tuning of channels.	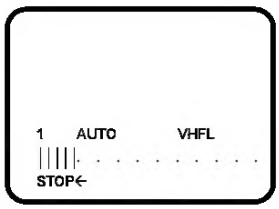
4	V	Press button to stop tuning. **Note:** when the tuning is completed, the menu will quit automatically.	

MANUAL TUNING OF CHANNELS

Manual tuning allows you to select your preferred channel number for every available programme.

Step	Press button		Result on screen
1	MENU	Press twice to enter MEMORY main menu.	
2	C / C	Press button repeatedly until Manual Store is selected.	

ËµÄ÷Ê6.p65 10 02-7-2, 17:47

Downloaded from www.Manualslib.com manuals search engine

EMPTYING & CLEANING THE DIRTY WATER TANK: CONTINUED

PLACING DIRTY WATER TANK IN BASE OF CLEANER

Lift front base of cleaner off carpeting with one hand.

Grasp handle and hook front of dirty water tank into base of cleaner, making sure front of dirty water tank is resting on the base (Diagram 2). The Dirty Water Tank has 3 tabs on the underside which MUST latch into the underside of the base of the cleaner. It is very important to lift the base of the cleaner off of the carpeting and hook the nozzle to the base so that the nozzle is flush with the base of the cleaner (Diagram 2a). Failure to install the Dirty Water Tank correctly (Diagram 2b), will result in poor dirty water pickup. The Dirty Water Tank will need to be emptied once or twice per fill up of the Clean Water Tank.

While making sure the front of the dirty water tank is resting on the base, place the rear of the tank into the base of the cleaner. Push handle down until it latches. **NOTE.** *Do not store cleaner with solution in reservoir or dirty water in dirty water tank. Mineral deposits and mildew can form which will affect the performance of your Carpet Shampooer.*

To empty dirty water tank, grasp handle with one hand and nozzle with the other and empty into sink. Replace dirt water tank lid.

Rinse dirty water tank and filter with hot tap water. Wipe and let dry thoroughly before storing to prevent mildew from forming. **NOTE** *Do not use any chemicals when cleaning.*

REMISE EN PLACE DU RESERVOIR D'EAU SALE DANS LA BASE DE L'ASPIRATEUR

Soulever la base avant de l'aspirateur de la moquette d'une seule main.

Remettre le couvercle du reservoir d'eau sale et le volet d'accessoires de tuyau en place. **REMARQUE :** *Ne pas utiliser de produits chimiques pour le nettoyage.*

Pour vider le reservoir d'eau sale, saisir la poignee d'une main et le suceur de l'autre et vider dans l'evier.

POUR VIDER ET NETTOYER LE RESERVOIR D'EAU SALE : SUITE

Tout en veillant a ce que le devant du reservoir d'eau sale repose sur la base placer l'arriere du reservoir dans la base de l'aspirateur. Appuyer sur la poignee jusqu'a enclenchement. **REMARQUE :** *Ne pas ranger l'aspirateur avec de la solution dans le reservoir ou de l'eau sale dans le reservoir d'eau sale. Des depots mineraux et de la moisissure peuvent se former et nuire aux performances de votre shampouineur de moquette.*

Saisir la poignee et accrocher le devant du reservoir d'eau sale dans la base de l'aspirateur, en veillant a ce que le devant du reservoir d'eau sale repose sur la base (Schema 2). Reservoir d'eau sale. Le reservoir d'eau sale est muni de trois (3) pattes sur le dessous qui DOIVENT se verrouiller dans le dessous de la base de l'aspirateur. Il est tres important de soulever la base de l'aspirateur de la moquette et d'accrocher le suceur a la base de l'aspirateur (Schema 2a). Une mauvaise installation du reservoir d'eau sale entrainerait une reoperation inadequate de l'eau sale (Schema 2b). Le reservoir d'eau sale doit être vide une ou deux fois par remplissage du reservoir d'eau propre.

Downloaded from www.Manualslib.com manuals search engine

Locking/unlocking the control panel

The control panel, with the exception of the "On/Off" sensor field, can be locked at any time in order to prevent the settings being changed e.g. by wiping over the panel with a cloth.

	Control panel	Display
Switch on	Touch	(for 5 seconds)
Switch off	Touch	previously set heat setting

When you switch the appliance off, the locking function is automatically switched off.

Using the child safety device

The child safety device prevents unintentional use of the appliance.

Setting the child safety device

Step	Control panel	Display/Signal
1.	Switch on the appliance (Do not set a heat setting)	
2.	Touch until the signal sounds	Acoustic signal
3.	Touch	

Appliance switches off. The child safety device is engaged.

Releasing the child safety device

Step	Control panel	Display/Signal
1.	Switch on the appliance	
2.	Touch until the signal sounds	Acoustic signal
3.	Touch	

Appliance switches off. The child safety device is released.

Installation

There are three steps involved in installing this VTR. First, you need to check whether your TV has video or audio inputs. (To do this, look under specifications in the manual which came with your TV.) Second, connect the VTR to the TV. Third, insert batteries into the Remote Commander. For you safety, turn the TV off before you begin these tasks.

(B-1)

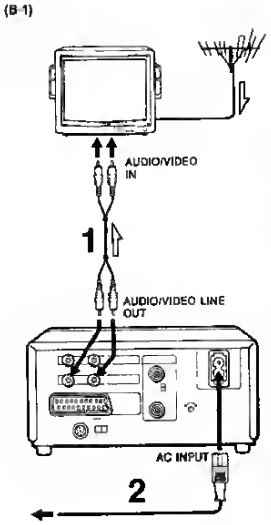

(B-2)

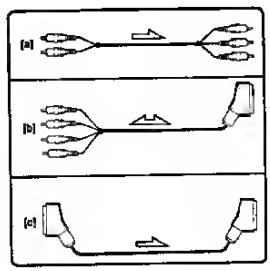

How to connect this VTR to a TV with audio-video inputs

(B-1)

1 Plug the supplied A-V cable into the TV and the VTR.

- The yellow plugs should be plugged in VIDEO IN/OUT jacks.
- The grey/black plugs should be plugged in AUDIO IN/OUT jacks.

2 Plug the supplied AC power cord into the VTR and an electric outlet.

Optional cables (B-2)

Depending on the type of TV you own you may have to use one of the following cables

[a] If you have a TV with stereo-type audio inputs use a VMC-810MSP/920MSP cable

[b] If you have a TV with a 21-pin connector use a VMC-2104M cable. (Unlike the other cables, you can leave this cable as is for both recording and playback).

[c] If you have a TV with a 21-pin connector use a VMC-2121CE cable. (Installing this cable is simple, however you will only be able to use it for playback).

Downloaded from www.Manualslib.com manuals search engine

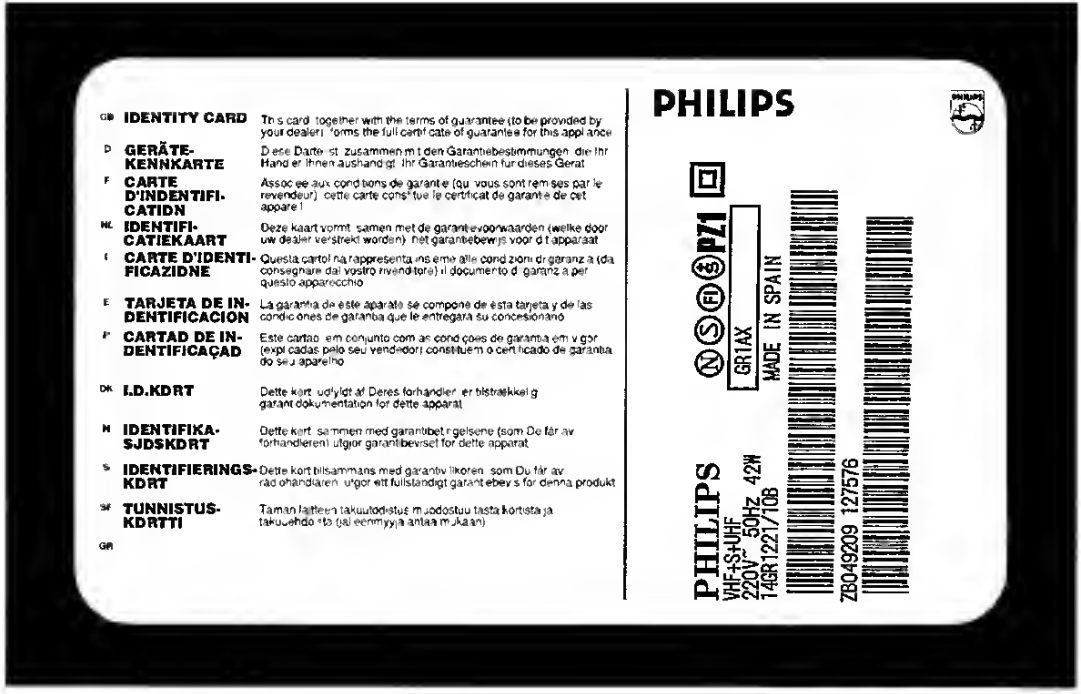

3122 126 0096.3

Downloaded from www.Manualslib.com manuals search engine

Advanced features

Parental Control

Locking TV content

Parental control is a handy feature that can block all TV sources.

Parental control allows you to enter a password and effectively stop anyone without the password from watching TV.

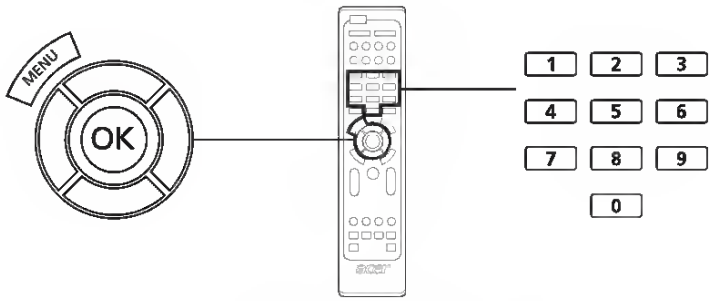

To enable this feature:

Setting a password			
1			Press the **MENU** key on the remote control to bring up the OSD.
2			Use the **directional keys** to navigate to the Parental Contol menu. Then select **Password**. (see note)
3			Enter a four-digit password. Type it again and press **OK** to reconfirm.
4			Press **MENU** to exit.

The default PIN for this TV is "0000." First enter "0000" when you want to change the PIN. If you forget your PIN, please enter 6163 to reset.

Downloaded from www.Manualslib.com manuals search engine

7. Circuit Diagrams and PWB Layouts

Main Panel (05TA085-5): MCU

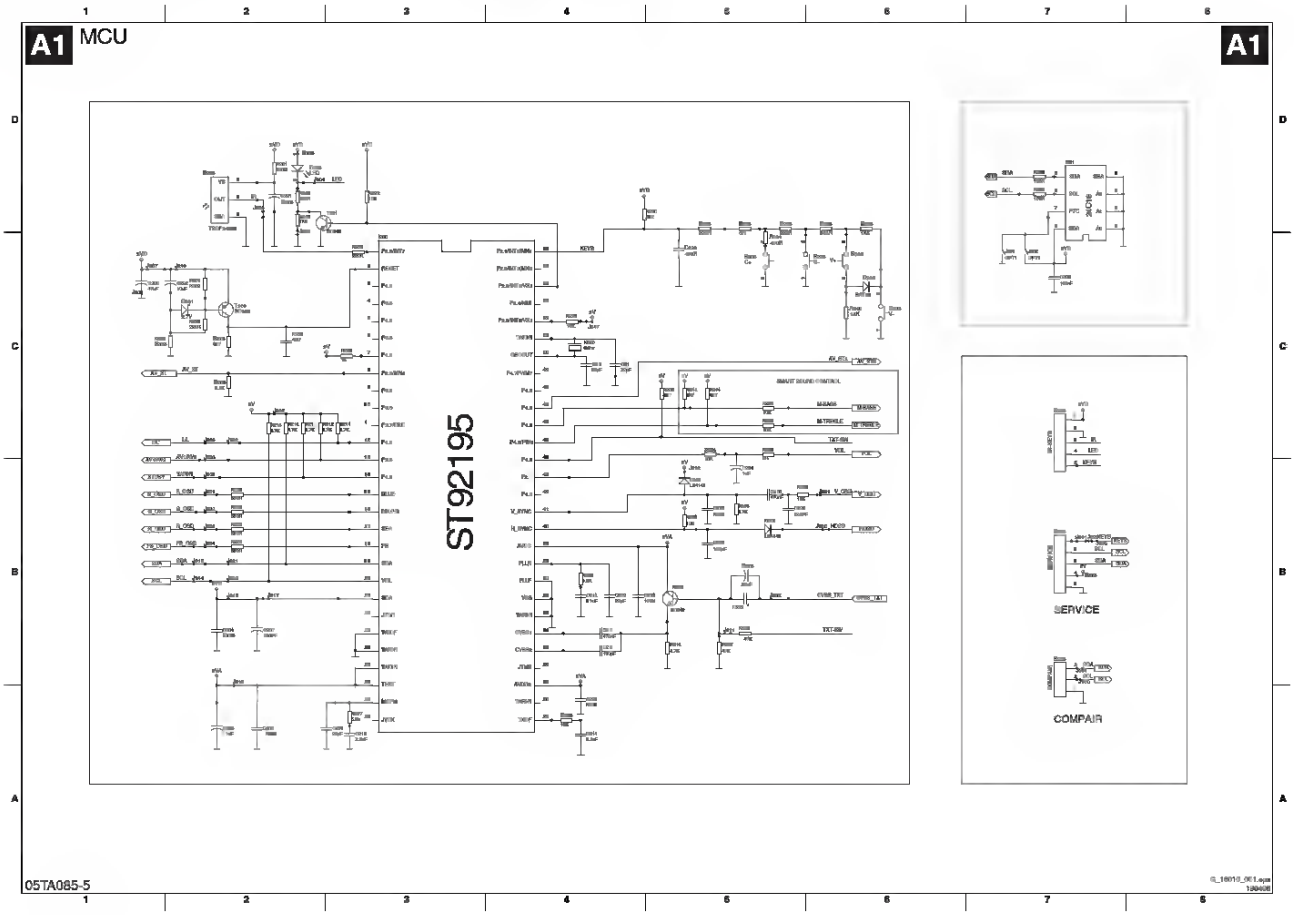

Downloaded from www.Manualslib.com manuals search engine

Connecting the power cord

- Check first to make sure that the power cord you use is the correct type required for your area.
- The monitor has a universal power supply that allows operation in either 100/120 V AC or 220/240 V AC voltage area. No user-adjustment is required.
- Plug one end of the power cord to the AC inlet, and plug the other end into an AC outlet.
- For units using 120 V AC:
  Use a UL-listed cord set, type SVT wire and plug rated 10 A/125 V.
- For units using 220/240 V AC:
  Use a cord set consisting of H05VV-F cord and plug rated 10 A/250 V. The cord set should have the appropriate safety approvals for the country in which the equipment will be installed.

Power saving

The monitor will be switched to "power saving" mode by the control signal from the display controller, as indicated by the amber-colored power LED.

Mode	LED light
On	Blue
Power saving	Amber

The power saving mode will be kept until a control signal has been detected or the keyboard or mouse is activated. The recovery time from "power saving" mode back to "on" is around 3 seconds.

Display Data Channel (DDC)

To make installation easier, so long as your system supports the DDC protocol, the monitor is able to plug-and-play. The DDC is a communication protocol through which the monitor automatically informs the host system about its capabilities; for example, supported resolutions and corresponding timing. The monitor supports the DDC2B standard.

Downloaded from www.Manualslib.com manuals search engine

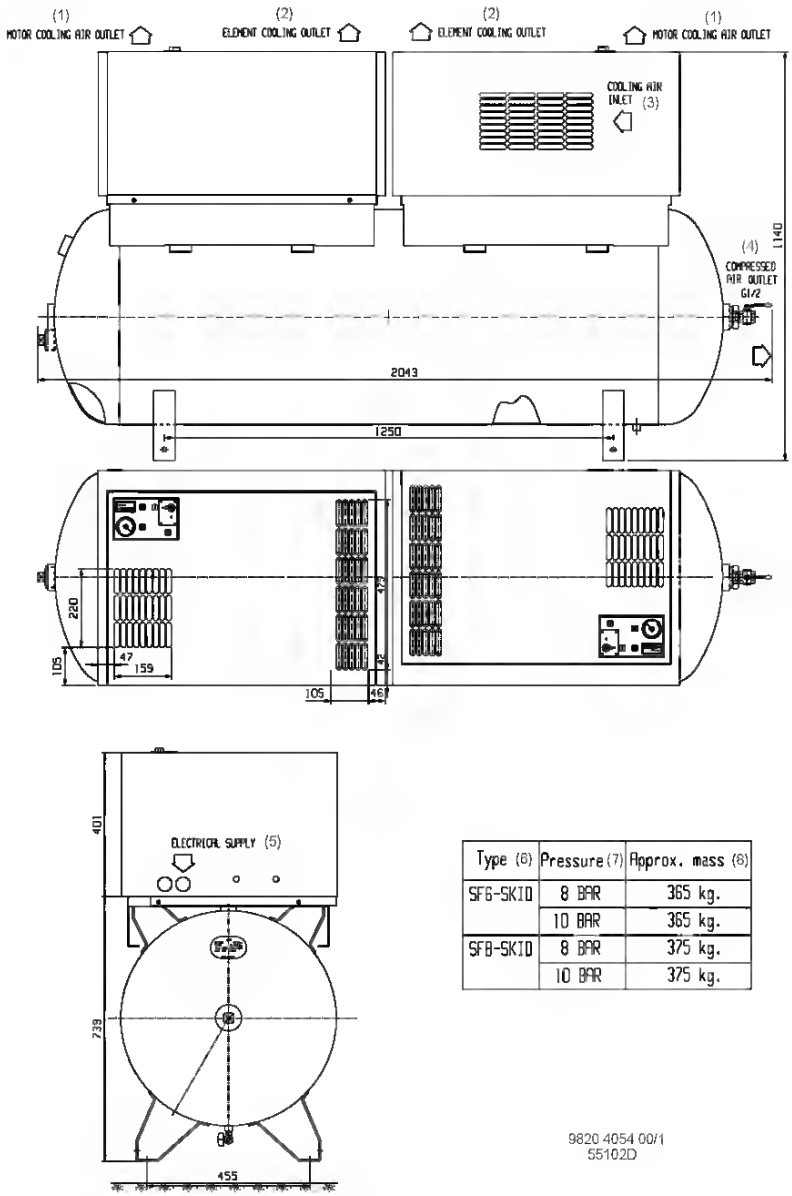

Type (6)	Pressure (7)	Approx. mass (8)
SF6-SKID	8 BAR	365 kg.
	10 BAR	365 kg.
SF8-SKID	8 BAR	375 kg.
	10 BAR	375 kg.

9820 4054 00/1
55102D

Fig 2.3 Dimension drawing, SF 6-8 Twin

Text on Figs 2.1/2.3

1	Motor cooling air outlet	5	Electrical supply
2	Element cooling outlet	6	Type
3	Cooling air inlet	7	Pressure
4	Compressed air outlet	8	Mass, approx.

Downloaded from www.Manualslib.com manuals search engine

1	*[START / STOP]* Button to start and stop song playback.
2	*[VOLUME]* Volume control for audio and headphones output.
3	3-digit LED display.
4	*[CLICK]	[DEMO]* Button to turn the metronome on and off and to play the demo song.
5	*[MODE]* Button to open the selection menu.
6	*[PAGE]* Button to scroll through the open menu.
7	*[+] / [–]* Increases or decreases the currently displayed value.

Downloaded from www.Manualslib.com manuals search engine

Notes on the Baking Tables

In the tables you will find information on temperatures, cooking times and shelf positions for a selection of dishes.

- Ranges are given for the temperature and cooking time since these are dependent on the mixture, quantity and cake tin used.
- When using for the first time, we recommend setting the lower temperature, and only if necessary, e.g. if increased browning is required or the cooking time is too long, selecting a higher temperature.
- If you cannot find specific information for one of your own recipes, use information on a similar recipe for guidance.

Switch off the oven 10-15 minutes before the end of the cooking time to make use of the residual heat.

The information in the tables applies, when not otherwise stated, for a cold oven.

Downloaded from www.Manualslib.com manuals search engine

Mounting the monitor

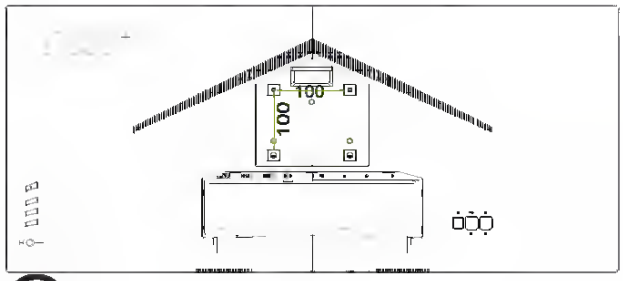

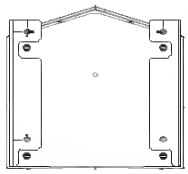

Wall mount BKT

*Purchased separately

Note:

- The LCD monitor shall only be used with an approved am (e.g.GS mark).
- To meet the safety requirements, the monitor must be mounted to an arm that supports the weight of the monitor.
- This monitor supports the VESA industry standard 100 mm mounting holes.

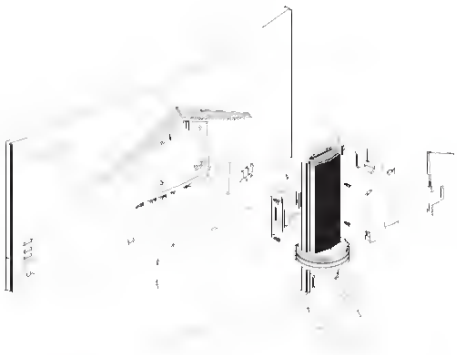

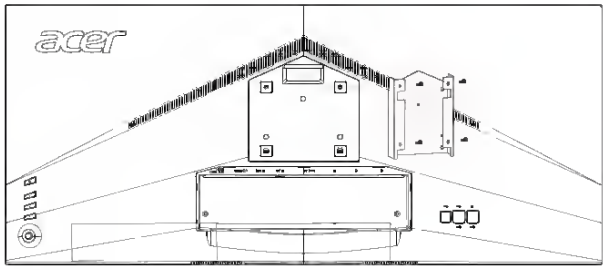

Note:

The monitor could be mounted to the wall through mounting bracket, the steps as below,

1. Remove the stand from the monitor, keep the four screws(M4*10.0mm).
2. To attach the monitor to a mounting bracket (purchased separately)
   2.1.Attach the wall mount BKT with four M4*8.0mm screws, tighten it to the back of the monitor;
   2.2.Attach the mounting bracket with four M4*10.0mm screws, tighten it to the wall mount BKT.

Downloaded from www.Manualslib.com manuals search engine

Model numbers

Please see the back page of this booklet for a list of the H2x6xBP ovens to which these operating and installation instructions refer.

Data plate

The data plate is located on the front frame, visible when the door is open.

The data plate states the model number of your oven, the serial number as well as connection data (voltage, frequency and maximum connected load).

Please have this information to hand, should you need to contact Miele regarding any questions or problems.

Items supplied

The oven is supplied with:

- the operating and installation instructions for using the oven,
- screws for securing your oven in the housing unit,
- various accessories.

Accessories supplied and available to order

Accessories will vary depending on model.
Your oven will be supplied with side runners, a universal tray and a rack. Depending on model, your oven may also come supplied with some or several of the accessories listed here.

All the accessories listed as well as the cleaning and care products are designed for Miele appliances.

These can be ordered via the internet at www.miele-shop.com, from Miele (see back cover for contact details) or from your Miele dealer.

When ordering, please quote the model number of your oven and give a description of the accessories required.

Downloaded from www.Manualslib.com manuals search engine

Underside

The memory compartment, main battery, battery release switch, and the pop-up feet are located on the underside of your Notebook.

Tip *Before contacting Compaq Customer Support, you will need the serial number from the underside of your Notebook.*

Components on Underside

❶ Pop-up Feet

❷ Expansion Memory Compartment

❸ Battery Release Switch

❹ Main Battery Compartment

❺ Modem Compartment

❻ Hard Drive Access Panel

See also *"Using Battery Power" in Chapter 3 of this guide for more information about the Battery Release Switch.*

Downloaded from www.Manualslib.com manuals search engine

Step 7: Place 5pcs of AL-tapes on the four sides of main-shielding to protect EMI and Add TCO AL

4G.0F913.001	TAPE AL 110*25*0.08T V2400W	2
4G.0E308.001	TAPE AL 150*25*0.08 VW195	1
4G.0LN05.001	TAPE AL 120*45*0.08T P244W	1
4G.0LN06.001	TAPE AL 155*55*0.08T TCO P244W	1

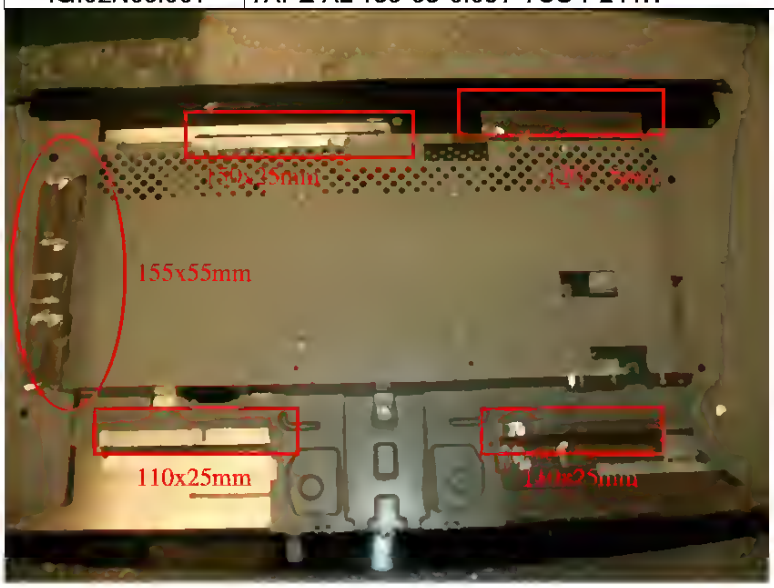

Step8: Take one front-bezel and place the CTRL keypad and LED BD on the bezel

Downloaded from www.Manualslib.com manuals search engine

LIMITED WARRANTY

Terms and Conditions Applying to Sale of Equipment

1. Limited Warranty.

Any part of the system, including the wiring, installed under this Agreement which proves to be defective in material or workmanship within 90 days of the date of completion of installation will be repaired or replaced at ADT's option with a new functionally operative part. Labor and material required to repair or replace such defective components or to make mechanical adjustments to the system will be free of charge for a period of 90 days following the completion of the original installation.

This warranty is extended only to the original consumer purchaser of the system and may be enforced only by such person.

To obtain service under this warranty, call or write our local ADT Service Department at the telephone number or address found in your local yellow pages.

Service pursuant to the warranty will be furnished only during ADT's normal working hours 8:00A.M. to 4:30P.M., Monday through Friday, except holidays. Services rendered outside the normal working hours of ADT are not within the scope of this warranty and any services requested to be performed at such times shall be charged for at ADT's then applicable rates for labor and material.

This warranty does not apply to the conditions listed below, and in the event customer calls ADT for service under the warranty and upon inspection it is found that one of these conditions has led to the inoperability or apparent inoperability of the system, a charge will be made for the service call of the ADT representative, whether or not he actually works on the system. Should it actually be necessary to make repairs to the system due to one of the "conditions Not Covered By Warranty", a charge will be made for such work at ADT's then applicable rates for labor and material.

Conditions Not Covered By Warranty.

A. Damage from accidents, acts of God, alterations, misuse, tampering or abuse. **B.** Failure of the customer to properly close or secure a door, window, or other point protected by a burglar alarm device. **C.** Failure of customer to properly follow operating instructions provided by ADT at time of installation or at a later date. **D.** Trouble in leased telephone. **E.** Trouble due to interruption of commercial power. **F.** Battery replacements.

Downloaded from www.Manualslib.com manuals search engine

HINTS AND TIPS

- Single level cooking gives best results. If you require more than one level of cooking use the main fan oven.

- The middle shelf allows for the best heat distribution. To increase base browning simply lower the shelf position. To increase top browning raise, the shelf position.

- There should always be at least 2.5cm (1") between the top of the food and the grill element. This gives best cooking results and allows room for rise in yeast mixtures, Yorkshire puddings etc. When cooking cakes, pastry, scones bread etc., place the tins or baking trays centrally on the shelf.

- Ensure that food is placed centrally on the shelf and there is sufficient room around the baking tray or dish to allow for maximum circulation.

- Stand dishes on a suitably sized baking tray on the shelf to prevent spillage onto the oven base and to help reduce cleaning.

- The material and finish of the baking tray and dishes used will affect the degree of base browning. Enamelware, dark, heavy or non-stick utensils increase base browning. Shiny aluminium or polished steel trays reflect the heat away and give less base browning.

- **Do not** place baking trays directly on the oven base as it interferes with the oven air circulation and can lead to base burning, use the lower shelf position.

- For economy leave the door open for the shortest possible time, particularly when placing food into a pre-heated oven.

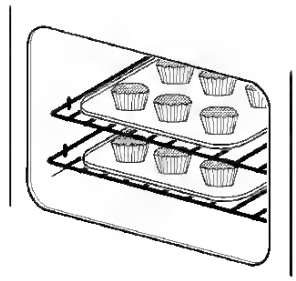

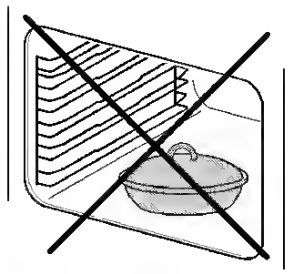

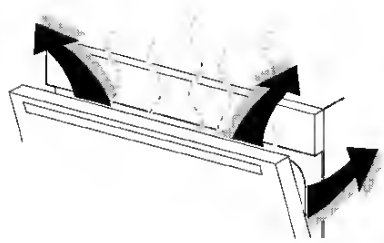

Do not place cookware and cooking pots with rough bases e.g. cast iron on the oven door as damage to the glass may occur.

Downloaded from www.Manualslib.com manuals search engine

Downloaded from www.Manualslib.com manuals search engine

Calling a contact's internet calling address

You must add an internet calling address to a contact to be able to place an internet call to them.

To make an internet call, from the *Application menu* tap **People**. Tap on the contact to open their profile, and then tap on their internet calling address to place the call.

Note

Many modern internet calling apps automatically "connect" to any of your Android contacts who also have that service. Any connected services will be listed under "connections" in the contact's profile.

Calling a phone number using internet calling

If you have configured your phone to place all calls using internet calling or to ask for each call, you may also call a phone number using internet call, whenever you are connected to a wireless network.

Dial the number and tap , or select the contact you wish to place a call to, then tap the internet call account you want to use to make the call.

Important

Calling a phone number using internet calling requires that your service provider supports it, and may incur additional charges. Please contact your service provider if you have any questions.

Downloaded from www.Manualslib.com manuals search engine

3. Place cleaned upper basket spray arm back in position against the connecting piece: press the two together firmly, until you feel them snap into place.

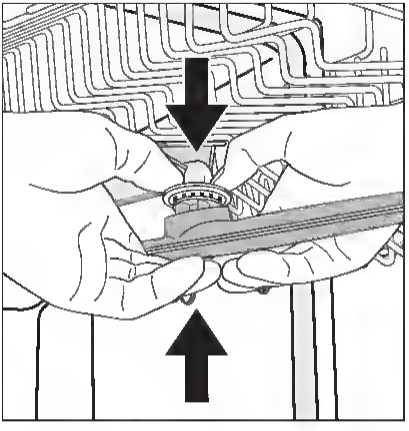

Bottom spray arm

1. To remove bottom spray arm, pull it upwards out of its catch.
2. Clean spray arm jets.
3. Place bottom spray arm back in position against connecting piece and press down firmly, until you feel it snap into place.

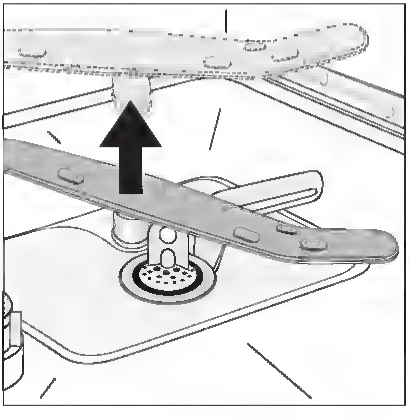

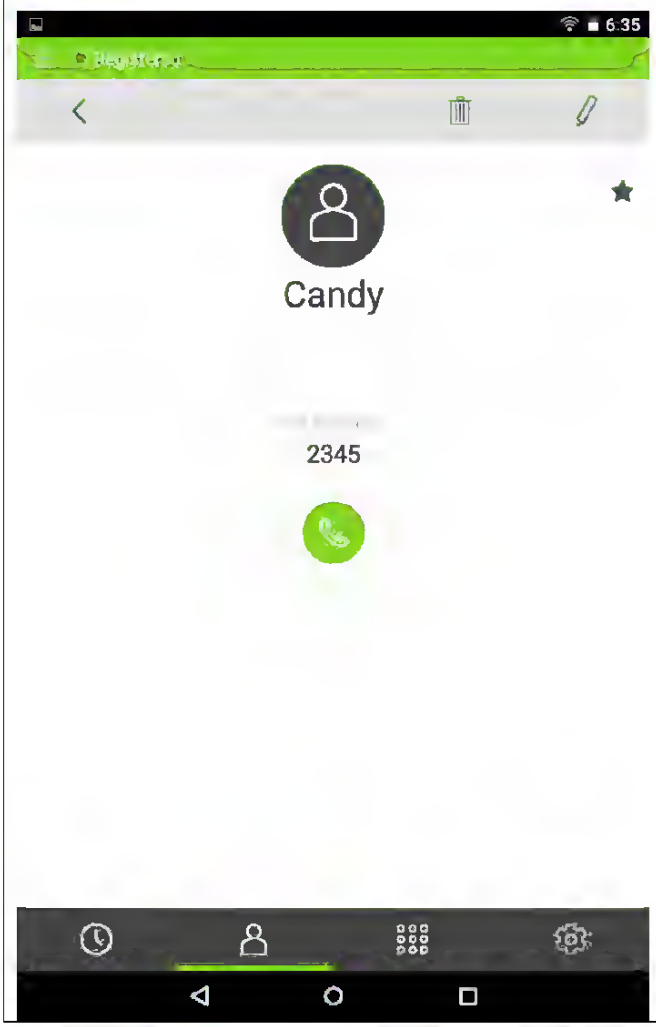

Press add icon to edit a new Personal contact.

Downloaded from www.Manualslib.com manuals search engine

PIZZA

This setting can be used for foods such as pizza where base browning and crispness are required. The top and lower elements operate in conjunction with the oven fan.

USING PIZZA

- The oven must be switched on before setting any cooking function or programme.
- Press the Oven Cavity selector until the main oven cavity is illuminated.
- Press the Function selector until the Pizza neon is illuminated.
- Wait 5 seconds until your choice is confirmed. The temperature will automatically set to 150°C.
- If you wish to alter the set temperature, you may do so by pressing - or + until the required temperature setting is reached.
- To switch off a function simply press the Function selector once. The function neon will go out and the display will return to the time of day.

THINGS TO NOTE

- The oven light will illuminate.
- The heat indicator neons will flash until the oven has reached the desired temperature and then stop, an audible signal will sound. When the oven has been switched off the bars that are still lit indicate the remaining residual heat in the oven.
- If it is necessary to reach the required temperature in a shorter time, the Speedcook Function can be used. See Speedcook Function section.
- The cooling fan for the controls may operate after a time.
- If an automatic programme has been set, the oven fan and light do not come on until cooking begins.
- Some internal noise may be heard during operation. This is quite normal.

HINTS AND TIPS

- Single level cooking using the middle shelf position gives best results.
- Ensure that food is placed centrally on the shelf for maximum air circulation.
- Be guided by the cook times and temperatures given on any packaging.
- Some pizzas should be cooked directly on the oven shelf. To prevent soiling the oven base, place a baking tray in one of the lower shelf positions.

Do not place dishes, tins or baking trays directly onto the oven base as it becomes very hot and damage may occur.

- The material and finish of the baking trays and dishes used will affect base browning. Enamelware, dark heavy or non-stick utensils increase base browning. Shiny aluminium or polished steel trays reflect the heat away and give less base browning.

Downloaded from www.Manualslib.com manuals search engine

config-update operation ... 2-25
config-update start ... 2-25
config-update time ... 2-25
config-update url ... 2-25
config-update weekday ... 2-25
config-version ... 2-53
console authentication ... 2-18
contact ... 2-148
control method ... 2-86
controlled network ... 2-9
country code ... 2-167
credentials ... 2-98
daily restriction ... 2-139
data rate ... 2-110
New default ... 2-187
delete ip-qos profile all ... 2-111
delete ip-qos profile ... 2-111
dhcp mode ... 2-18
dhcp public ip default lease period ... 2-10
dhcp public ip subnet ... 2-10
New dhcp relay access access network ... 2-21
dhcp relay access centralized clients ... 2-21
dhcp relay access lan ... 2-21
dhcp relay active ... 2-115
dhcp relay circuit id ... 2-115
dhcp relay circuit id ... 2-20
New dhcp relay extend internet network ... 2-22
dhcp relay extend internet port ... 2-21
dhcp relay remote id ... 2-115
dhcp relay remote id ... 2-21
dhcp relay subnet ... 2-115
dhcp relay ... 2-115
dhcp relay ... 2-20
dhcp server access centralized clients ... 2-20
dhcp server access lan ... 2-20
dhcp server controller discovery ... 2-19
dhcp server controller ... 2-19
dhcp server default domain name ... 2-19
dhcp server default lease period ... 2-19
dhcp server default permanent lease period ... 2-19
dhcp server dns ... 2-116
dhcp server gateway ... 2-116
dhcp server logout html user ... 2-20
dhcp server range ... 2-116
dhcp server subnet ... 2-116
dhcp server ... 2-116
dhcp server ... 2-19
disassociate controlled-ap wireless client _ ... 2-8
discovery protocol device-id ... 2-44
discovery protocol ... 2-44
discovery provisioning ... 2-169
distance ... 2-170
dns domain name ... 2-168
dns domain ... 2-129
dns name ... 2-168
dns provisioning ... 2-168
dns server ... 2-129
dns server ... 2-169
dot11 automatic frequency period ... 2-171
dot11 automatic frequency time ... 2-171
dot11 automatic frequency ... 2-171
dot11 automatic transmit-power period ... 2-172
dot11 automatic transmit-power ... 2-172
dot11 mode ... 2-173
dot11 ... 2-170
dot11n channel extension ... 2-174
dot11n channel width ... 2-174
dot11n guard interval ... 2-174
dot11n mac protection ... 2-175
dot11n mimo ... 2-174
dot1x authentication ... 2-102
dot1x authentication ... 2-182
New dot1x radius accounting start delay ... 2-51
dot1x reauth period ... 2-155
dot1x reauth period ... 2-52
dot1x reauth terminate ... 2-155
dot1x reauth terminate ... 2-52
dot1x reauth ... 2-155
dot1x reauth ... 2-52
dot1x session page ... 2-103
dot1x supplicant timeout ... 2-156
dot1x supplicant timeout ... 2-52
dot3-tlv-enable ... 2-189
dual radio binding ... 2-162
duplex ... 2-89
duplex ... 2-91
New duplex-mode ... 2-118
dynamic key interval ... 2-155
dynamic key interval ... 2-53
dynamic key ... 2-155
dynamic key ... 2-52
dynamic mode ... 2-177
dynamic vlan ... 2-182
eap ... 2-167
egress rate ... 2-182
egress unauthenticated ... 2-100
egress vlan ... 2-145
egress vlan ... 2-162
egress vlan ... 2-162
egress vlan ... 2-80
egress vlan ... 2-86
enable console password reset ... 2-18
enable vsc services ... 2-157
enable ... 2-3
encryption key 1 ... 2-101
encryption key format ... 2-101
end force ... 2-128
end time ... 2-139
end time ... 2-86
end ... 2-11
end ... 2-117
New end ... 2-118
end ... 2-120
end ... 2-122
end ... 2-125
end ... 2-127
end ... 2-129
end ... 2-133
end ... 2-135
end ... 2-137
end ... 2-138
end ... 2-139
end ... 2-142
end ... 2-143
end ... 2-144
end ... 2-147
end ... 2-149
end ... 2-150
end ... 2-151
end ... 2-162
end ... 2-164
end ... 2-165

1

Press the VCR button.

2

Press the REC(ord)/OTR button to start a recording of the current channel. (See page 31.) The Record light will appear on the VCR display panel.

3

Press the VCR/TV button to put the VCR in TV position. The VCR light will disappear from the VCR's display panel.

4

Press the TV button, then press the CH(annel) ▲/▼ or Number buttons to choose the channel you want to watch at the TV. (If the VCR remote control doesn't operate your TV, use the TV remote control to select the channel.)

5

To return to the channel being recorded, press the TV button, then select channel 03 or 04 at the TV (the channel to which the CH3/CH4 switch on the back of the VCR is set).
(If the VCR remote control doesn't operate your TV, use the TV remote control to select channel 03 or 04.)

6

Press the VCR button.

7

Press the VCR/TV button to put the VCR in VCR position. The VCR light will appear on the display panel. The channel being recorded will appear on the TV screen.

8

Press the STOP/▼ button to stop the recording.

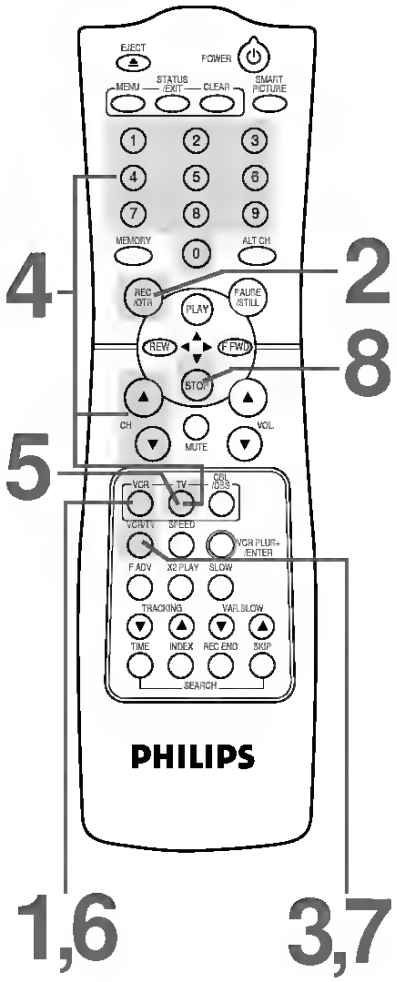

Helpful Hints

- *If your VCR remote control does not operate your TV, see page 21 for more information.*
- *If you use a Cable Box or Direct Broadcast System, you may not be able to watch one channel while recording another. See pages eighty-nine for details.*

Downloaded from www.Manualslib.com manuals search engine

CALIBRATION PROCEDURE

1. Remove the safety key
2. Press and hold down the **Start** and **Fast +** buttons and replace the safety key. Continue to hold the **Start** and **Fast** key until the window displays "Factory settings", then press the **Enter** key.
3. You will now be able to set the display to show Metric or English settings (Miles vs. Kilometers). To do this, press the up or down key to show which you want, then press **Enter**.
4. Make sure the wheel size diameter is 2.83 then press **Enter**
5. Adjust the minimum speed (if needed) to 0.5 and then press **Enter**
6. Adjust the maximum speed (if needed) to 12.0 and then press **Enter**
7. Adjust the maximum elevation (if needed) to 15 and then press **Enter**
8. Grade return – On (This allows the incline to return to zero when **Stop** is pressed. For sale in Europe, EU standards require this to be off)
9. Press **Start** to begin calibration. The process is automatic; the speed will start up without warning, so do not stand on the belt.

ADJUSTING THE SPEED SENSOR

If the calibration does not pass you may need to check the speed sensor alignment.

1. Remove the motor cover hood by loosening the 4 screws that hold it in place (you do not need to remove them completely).
2. The speed sensor is located on the left side of the frame, right next to the front roller pulley (the pulley will have a belt around it that also goes to the motor). The speed sensor is small and black with a wire connected to it.
3. Make sure the sensor is as close as possible to the pulley without touching it. You will see a magnet on the face of the pulley; make sure the sensor is aligned with the magnet. There is a screw that holds the sensor in place that needs to be loosened to adjust the sensor. Re-tighten the screw when finished.

MAINTENANCE MENU

1. Press and hold the **Start**, **Stop** and **Enter** key at the same time, until the display shows "Engineering mode" (it may say maintenance menu, depending on version). Press the **Enter** key.
2. You can now scroll through the menu using the + and - keys. Use the **Stop** key to return to previous menu selection. The menu selections are:
   - A. **Key Test** - Tests that each key is functioning properly
   - B. **Display** - Test the LCD display segments are all lighting properly
   - C. **Functions**
     - I. **Sleep Mode** - Allows you to turn off the sleep mode. Console will stay on all the time unless power is turned off.
     - II. **Pause Mode** - When the console is paused during a program this will allow you to keep the console paused indefinitely instead of 5 minutes.
     - III. **Odometer** - Allows you to reset the odometer
     - IV. **English** - When enter is pressed allows you to change the settings for data to metric.
     - V. **Motor Test** - For service personnel only when troubleshooting motor problems.
     - VI. **Beep** - Allows you to disable the speaker so there is no beeping.
   - D. **Security** - Allows you to lock the keypad so the treadmill cannot be used. Press Enter to change setting (also called child lock).
   - E. **Factory Settings** - For factory use only

Downloaded from www.Manualslib.com manuals search engine

Step 2 Choose the option to **Back up files and settings** and click Next.

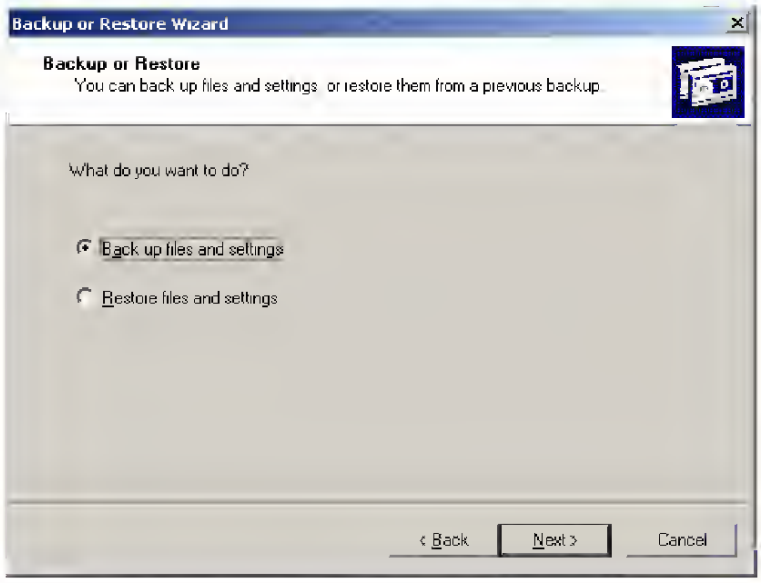

Step 3 Choose the fourth option to **Let me chose what to back up** and click Next.

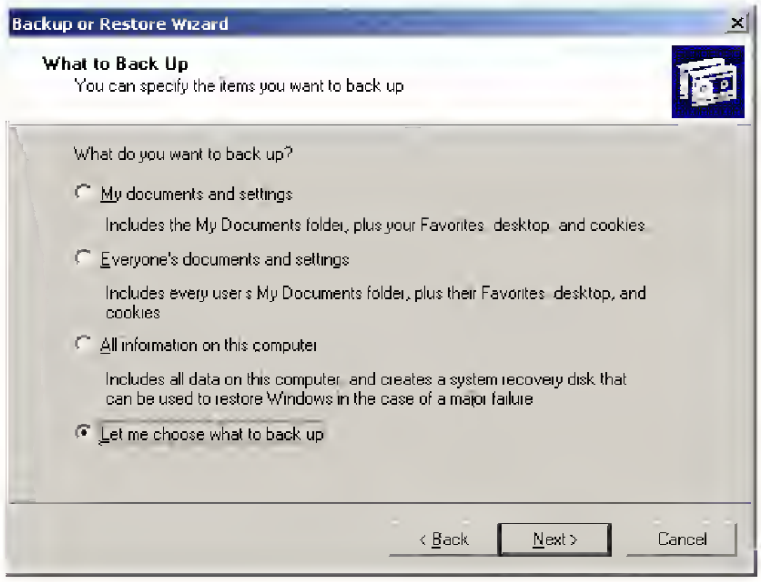

Downloaded from www.Manualslib.com manuals search engine

Positioning your monitor

Place your monitor at a comfortable viewing distance, usually 50 to 60 centimeters away. Adjust the display in such a way that the top of the screen is at or slightly below eye level.

Positioning your keyboard

The location of the keyboard is a very important factor to your posture. Placing it too far away will make your body lean forward forcing you to sit in an unnatural position. Placing it too high will add tension to your shoulder muscles.

- The keyboard should be placed just above your lap. Adjust the keyboard height by flipping the folding stands located under the keyboard.
- Keep your lower arms parallel to the floor as you type. Your upper arms and shoulders should be relaxed. Then try typing with a light touch. If you feel any shoulder or neck strain, stop for a while and check your posture.
- Position your keyboard in front of your monitor. Putting your keyboard beside your monitor will make you turn your head while you type which could add tension to your neck muscles that may later result in neck strain.

Positioning your mouse

- The mouse should be placed on the same surface as your keyboard so that you can reach it with ease.
- Adjust its position to allow enough space for movement without making you stretch or lean over.
- Use your arm to move the mouse. Do not rest your wrist on the table when moving the mouse.

Downloaded from www.Manualslib.com manuals search engine

Étape 1. Branchement :

Branchez le périphérique Instant Video PCI à l'ordinateur :

A. Branchez la carte PCI directement dans un port PCI ouvert de la carte mère de l'ordinateur.
B. Après le branchement, allumez l'ordinateur. Un Assistant d'installation de pilotes apparaît à l'écran.

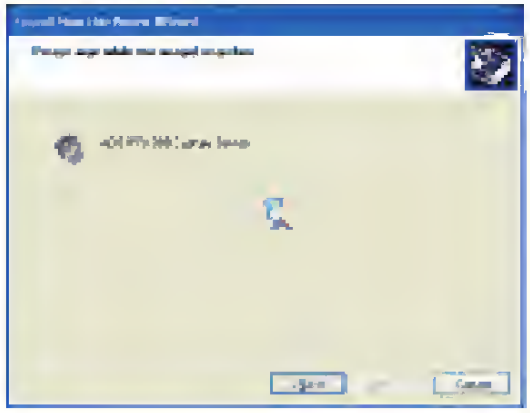

1) Sélectionnez « Installer le logiciel automatiquement (recommandé) », puis cliquez sur « Suivant ».

2) Laissez Windows rechercher les pilotes appropriés. Une fois les pilotes trouvés, la fenêtre « Installation matérielle » apparaît.

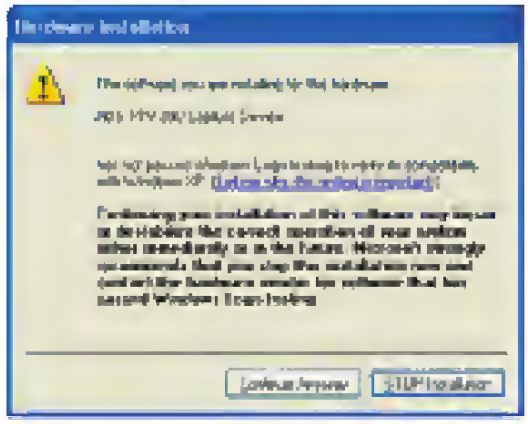

3) Cliquez sur « Continuer ».

Nota : cliquer sur « Continuer quand même » ne peut endommager votre ordinateur et vous permet d'achever l'installation de votre nouveau matériel.

Downloaded from www.Manualslib.com manuals search engine

WGen7500 EXPLODED VIEW

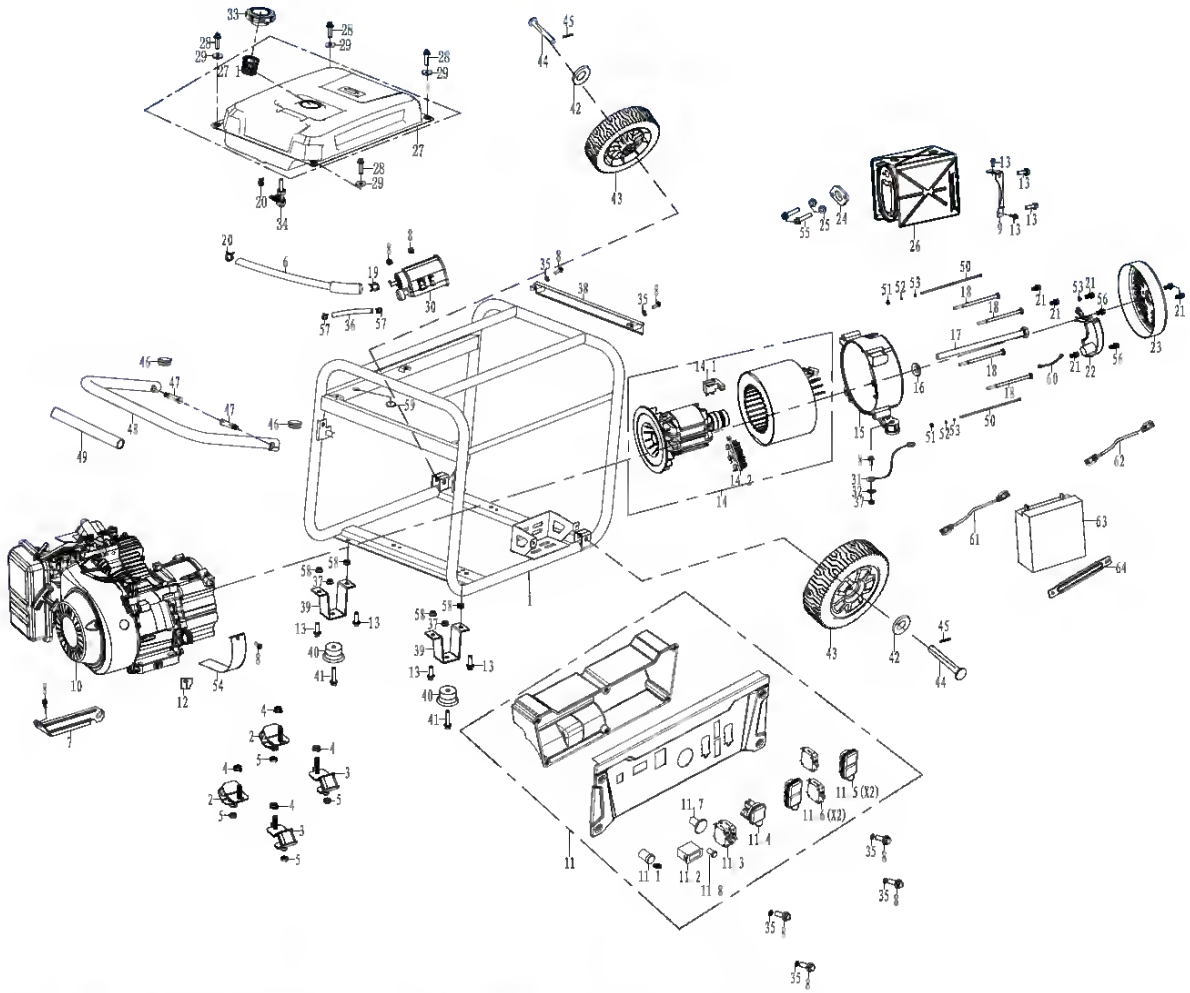

No.	Part	Description	Qty
1	[illegible]	[illegible]	1
2	[illegible]	[illegible]	2
3	[illegible]	[illegible]	2
4	[illegible]	[illegible]	4
5	[illegible]	[illegible]	8
6	[illegible]	[illegible]	1
7	[illegible]	[illegible]	1
8	[illegible]	[illegible]	1
9	[illegible]	[illegible]	16
10	[illegible]	[illegible]	1
11	[illegible]	Engine Assy	1
11-1	[illegible]	[illegible]	1
11-2	[illegible]	[illegible]	1
11-3	[illegible]	[illegible]	1
11-4	[illegible]	[illegible]	1
11-5	[illegible]	[illegible]	2
11-6	[illegible]	[illegible]	2
11-7	[illegible]	[illegible]	1
11-8	[illegible]	[illegible]	1
12	[illegible]	[illegible]	1
13	[illegible]	[illegible]	8
14	[illegible]	[illegible]	1
15	[illegible]	[illegible]	1
16	[illegible]	[illegible]	1
17	[illegible]	[illegible]	1
18	[illegible]	[illegible]	4
19	[illegible]	[illegible]	1
20	[illegible]	[illegible]	2
21	[illegible]	[illegible]	6
22	[illegible]	[illegible]	1
23	[illegible]	[illegible]	1
24	[illegible]	[illegible]	1
25	[illegible]	[illegible]	1
26	[illegible]	[illegible]	1
27	[illegible]	[illegible]	1
27-1	[illegible]	[illegible]	1
28	[illegible]	[illegible]	4
29	[illegible]	[illegible]	4
30	[illegible]	[illegible]	1
31	[illegible]	[illegible]	1
32	[illegible]	[illegible]	1
33	[illegible]	[illegible]	1
34	[illegible]	[illegible]	1
35	[illegible]	[illegible]	6
36	[illegible]	[illegible]	1
37	[illegible]	[illegible]	1
38	[illegible]	[illegible]	1
39	[illegible]	[illegible]	2
40	[illegible]	[illegible]	2
41	[illegible]	[illegible]	2
42	[illegible]	[illegible]	2
43	[illegible]	[illegible]	2
44	[illegible]	[illegible]	2
45	[illegible]	[illegible]	2
46	[illegible]	[illegible]	2
47	[illegible]	[illegible]	2
48	[illegible]	[illegible]	1
49	[illegible]	[illegible]	1
50	[illegible]	[illegible]	2
51	[illegible]	[illegible]	1
52	[illegible]	[illegible]	1
53	[illegible]	[illegible]	2
54	[illegible]	[illegible]	1
55	[illegible]	[illegible]	1
56	[illegible]	[illegible]	2
57	[illegible]	[illegible]	2
58	[illegible]	[illegible]	4
59	[illegible]	[illegible]	1
60	[illegible]	[illegible]	1
61	[illegible]	[illegible]	1
62	[illegible]	[illegible]	1
63	[illegible]	[illegible]	1
64	[illegible]	[illegible]	1

Downloaded from www.Manualslib.com manuals search engine

What to do if ...

.... the cooking zones don't work?

☞ Check whether
- the appropriate cooking zone has been switched on,
- the mains fuse (fuse box) has blown or the cooker circuit breaker (at the household power distribution box) has tripped.

.... the oven does not heat up?

☞ Check whether
- the appliance has been switched on,
- all the necessary settings have been made,
- the mains fuse (fuse box) has blown or the cooker circuit breaker (at the household power distribution box) has tripped.

If the circuit breaker trips several times, please contact an approved electrician.

.... the oven lighting goes off?

☞ Replace the light bulb in the oven (see Cleaning and care).

Information for appliances with a metal front:

ⓘ Due to the cold front of your appliance the inner door glass may steam over briefly if you open the door during or shortly after baking or roasting.

If you call in customer service to resolve a problem listed in these notes, or to rectify an error in the operation of the appliance, the customer service engineer's visit might not be free of charge, even during the warranty period.

Should you still have problems after reading this information, please contact your specialist dealer or customer service.

⚠ **Warning:** Repairs to the appliance should only be carried out by qualified specialists. Improperly effected repairs may result in considerable risk to the user. If your appliance needs repairing, please contact your specialist dealer or customer service.

Downloaded from www.Manualslib.com manuals search engine

1. Connect the RF coaxial cable to the main board.
2. Connect the RF coaxial cable to the sub board.

Align the RF coaxial cable to the chassis as the indicated position.

Downloaded from www.Manualslib.com manuals search engine

4

Press the Number 1 button to record in SP speed or the Number 2 button to record in SLP speed. Your selection will appear to the right of REC SPEED on the screen, although SP=1 SLP=2 will continue to flash. For details about tape speed, see pages 30 and 64. You cannot use the SPEED button at this time.

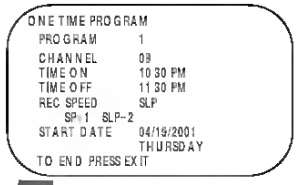

5

Press the STATUS/EXIT button. PROGRAM WAS COMPLETED / PLEASE TURN OFF FOR TIMER RECORDING will appear on the screen.

- If there is not a tape in the TV/VCR, PLEASE INSERT CASSETTE also appears on the screen.
- If there is a tape without a record tab in the TV/VCR, PLEASE REMOVE CASSETTE also appears on the screen. If this happens, insert a different tape.

6

Press the POWER button to turn off the TV/VCR power. The Record light will flash slowly if a tape is in the TV/VCR. If you forget to turn off the TV/VCR, PLEASE TURN OFF FOR TIMER RECORDING appears on the TV/VCR screen two minutes before a timer recording starts. The Record light will blink rapidly until you turn off the power for the recording.

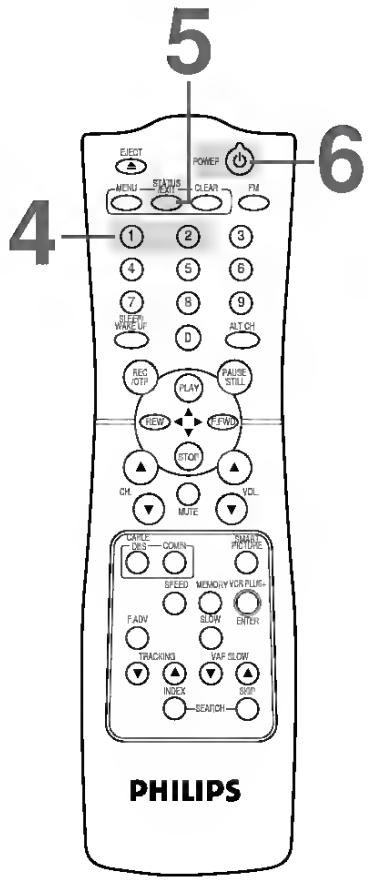

Turn off the TV/VCR for the recording. Insert a tape in the TV/VCR. Leave the Cable Box/DBS on (if applicable).

Helpful Hints

- *To exit the VCR Plus+ programming system at any time, press the STATUS/EXIT button. The display will disappear from the screen.*
- *To stop a started timer recording, press the STOP/EJECT button on the TV/VCR.*

Downloaded from www.Manualslib.com manuals search engine

Example directions in this guide	What to do in the user interface
Select **Controller > VSCs > [*VSC-name*] >> Configuration**.	**On a non-teamed MSM7xx controller** Expand the **Controller** branch (click its + symbol), expand the **VSCs** branch, select a **[*VSC-name*]**, then select **Configuration** on the main menu. **On an MSM7xx controller team** In the Network Tree on the team manager, expand the **Team: [*team-name*]** branch (click its + symbol), expand the **VSCs** branch, select a **[*VSC-name*]**, then select **Configuration** on the main menu.
For **Password** specify **secret22**.	In the **Password** field enter the text **secret22** exactly as shown.

New in this release

New CLI commands in this release are identified by the text New in the left margin. This is done in the table of contents, alphabetical list of commands, and *Chapter 2: CLI commands*.

HP support

For support information, visit www.hp.com/networking/support and for **Product Brand**, select **ProCurve**. Additionally, your HP-authorized networking products reseller can provide you with assistance.

Before contacting support

To make the support process most efficient, before calling your networking dealer or HP Support, you first should collect the following information:

Collect this information	Where to find it
Product identification.	On the rear of the product.
Software version.	The service controller management tool **Login** page.
Network topology map, including the addresses assigned to all relevant devices.	Your network administrator.

ECUALIZADOR GRAFICO

SELECCION DE LA CURVA DE ECUALIZACION PROGRAMADA

Esta unidad ofrece las 5 curvas de ecualización diferentes siguientes:
ROCK: Sonido potente que realza los agudos y los graves.
POP: Más presencia en las voces y en la gama de registro medio.
LATIN: Frecuencias más altas acentuadas para música latina.
CLASSIC: Sonido enriquecido con graves profundos y agudos finos.
JAZZ: Frecuencias bajas acentuadas para musica tipo jazz.

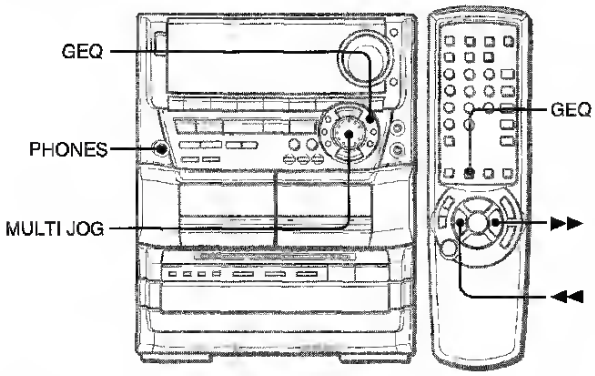

Pulse GEQ, y antes de que pasen 4 segundos gire MULTI JOG para seleccionar una de las curvas de ecualización programadas.

"GRAPHIC EQUALIZER" aparece y el modo GEQ se visualiza cíclicamente de la forma siguiente:

ROCK ↔ POP ↔ LATIN ↔ CLASSIC ↔ JAZZ
Modo programado
M5 ↔ M4 ↔ M3 ↔ M2 ↔ M1
Modo manual

Para visualizar el modo GEQ actual
Pulse **GEQ**. El modo actual se visualiza durante 4 segundos.

Para cancelar el modo selaccionado
Pulse dos veces **GEQ**.
"GEQ OFF" aparece y "GRAPHIC EQUALIZER" desaparece.

Para seleccionar con el control remoto
Pulse **GEQ**, y, antes de que pasen 4 segundos, pulse repetidamente ◀◀ o ▶▶. El modo GEQ se visualiza cíclicamente de la forma indicada arriba.

AJUSTE MANUAL DE UNA CURVA DE ECUALIZACION NUEVA

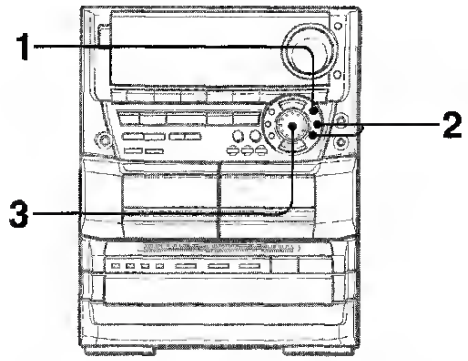

La curva de ecualización puede personalizarse para satisfacer sus preferencias.

Si ha transcurrido el tiempo predeterminado mientras realizaba estos pasos, pulse **UP** o **DOWN** para volver a la visualización anterior.

1 **Pulse GEQ.**
Se visualizará el modo GEQ actual o "GEQ ON".

2 **Antes de que pasen 4 segundos, pulse UP o DOWN para seleccionar las bandas de frecuencias.**
Cada vez que pulse **UP/DOWN**, un indicador de 4 segmentos se desplazará a la siguiente banda de frecuencias superior o inferior. (Si se muestra el modo GEQ actual, éste cambiará a "GEQ ON" la primera vez que se pulse **UP** o **DOWN**.)

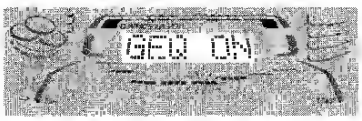

3 **Gire MULTI JOG para ajustar el nivel de ecualización para la banda de frecuencias seleccionada.**

4 **De forma similar, ajuste el nivel de ecualización para las otras bandas de frecuencias restantes.**

Utilización de auriculares
Conecte auriculares con clavija estéreo estándar de 6,3 mm ø a la toma **PHONES**.
Mientras los auriculares estén conectados no saldrá sonido de los altavoces.
• Cuando los auriculares estén enchufados, el sistema SURROUND no funcionará.

Ajuste de sonido durante la grabación
El control VOLUMEN no causa ningún efecto en la grabación. Sólo ajusta el sonido de los altavoces y auriculares. Sin embargo, recuerde que la grabación asume las funciones BEAT, AUTO SPICE/FILL IN, SPICE A/B, así como tambien la función BBE.

Downloaded from www.Manualslib.com manuals search engine

Schedules can be permanent or temporary. A permanent schedule is fixed, and remains in effect until it is changed (by an authorized user). A temporary schedule will override the permanent schedule for one day only. It is automatically deleted at midnight of the day it took effect. For example, on a Friday, a temporary closing time of 8:00 PM is programmed into the system to override the permanent schedule closing time of 5:00 PM. It will affect that day's (Friday's) schedule only. The 8:00 PM temporary closing time will be automatically deleted at midnight, thus restoring the permanent closing time of 5:00 PM for future Fridays.

Changing Daily Operating Schedules

Use the following procedure to re-program (change) the daily operating schedules.

1. Using the operating panel's numeric keypad, enter a valid ID code that has been assigned the privilege level of "Can change perm schedule."
2. Press **More** twice to display the Action Menu 3.
3. Press **Time** to display the Time Selection Menu.

Time Selection Menu

4. Press **Open/close** to display the "Group Description" selector button.
5. Press **Previous** or **Next** to display the desired "Group Description" of the schedule to be changed.

Downloaded from www.Manualslib.com manuals search engine

10. Spare Parts List

42"SDv2

PDP type

S42SD-YD06	9322 195 45682	PDP model name (non spare)
S42SD-YB04	9965 000 17797	PDP without PSU

BOARDS

LJ92-00832A	9965 000 17726	Logic-Buffer(E)
LJ92-00833A	9965 000 17725	Logic-Buffer(F)
LJ92-00634A	9965 000 17724	Logic-Buffer(G)
LJ92-00751A	9965 000 17727	Y-Buffer(up)
LJ92-00750A	9965 000 17728	Y-Buffer(down)
LJ92-00818A	9965 000 17729	Logic-Board
LJ92-00998A	9965 000 17720	X-Board
LJ92-00999A	9965 000 17731	Y-Board
LJ44-00049A	9965 000 17730	SMPS(PSU)

42"SDv3

PDP type

S42SD-YD05	9322 215 27882	PDP model name (non spare)
S42SD-YB03	9965 000 25997	PDP without PSU

BOARDS

LJ92-00811A	9965 000 25109	Logic-Buffer(E)
LJ92-00812A	9965 000 25110	Logic-Buffer(F)
LJ92-00813A	9965 000 25111	Logic-Buffer(G)
LJ92-00796A	9965 000 25112	Y-Buffer(up)
LJ92-00797A	9965 000 25113	Y-Buffer(down)
LJ92-00975D	9965 000 25114	Logic-Board
LJ92-00943A	9965 000 25115	X-Board
LJ92-00944B	9965 000 25116	Y-Board
LJ44-00058A	9965 000 25108	SMPS(PSU)
LJ44-00075A	9965 000 25131	SUB PSU

37"SDv4

PDP type

S37SD-YD02	8204 000 77281	PDP model name (non spare)
S37SD-YB01	9965 000 26018	PDP without PSU

BOARDS

LJ92-00976A	9965 000 26187	Logic-Buffer(E)
LJ92-00977A	9965 000 26188	Logic-Buffer(F)
LJ92-01002A	9965 000 26189	Logic-Buffer(G)
LG92-01022A	9965 000 26190	Y-Buffer(up)
LJ92-01058A	9965 000 28191	Logic-Board
LJ92-01020A	9965 000 26192	X-Board
LJ92-01021A	9965 000 28193	Y-Board
LJ44-00084A	9965 000 26194	SMPS(PSU)
LJ44-00075A	9965 000 25131	SUB PSU

42"HDv3 *not used in Eu sets

PDP type

S42AX-XD02	9322 215 25882	PDP model name (non spare)
S42AX-XB01	9965 000 26016	PDP without PSU

BOARDS

LJ92-00895A	9965 000 25101	Logic-Buffer(E)
LJ92-00898A	9965 000 25102	Logic-Buffer(F)
LJ92-00994A	9965 000 25103	Y-Buffer(up)
LJ92-00993A	9965 000 25104	Y-Buffer(down)
LJ92-00990E	9965 000 25105	Logic-Board
LJ92-00980A	9965 000 25106	X-Board
LJ92-00981A	9965 000 25107	Y-Board
LJ44-00058A	9965 000 25108	SMPS(PSU)
LJ44-00075A	9965 000 25131	SUB PSU

50"HDv3

PDP type

S50HW-XD03	9322 215 26682	PDP model name (non spare)
S50HW-XB02	9986 000 26017	PDP without PSU

BOARDS

LJ92-00917A	9985 000 25117	Logic-Buffer(E)
LJ92-00918A	9965 000 25118	Logic-Buffer(F)
LJ92-00919A	9965 000 25119	Logic-Buffer(G)
LJ92-00920A	9965 000 25120	Logic-Buffer(H)
LJ92-00921A	9965 000 25121	Logic-Buffer(I)
LJ92-00922A	9965 000 25122	Logic-Buffer(J)
LJ92-00880A	9965 000 25123	Y-Buffer(up)
LJ92-00881A	9965 000 25124	Y-Buffer(down)
LJ92-00949C	9965 000 25125	Logic-Board
LJ92-00923A	9965 000 25128	SUBL
LJ92-00959A	9965 000 25127	SUBR
LJ92-00852A	9965 000 25128	X-Board
LJ92-00853A	9965 000 25129	Y-Board
LJ44-00065A	9965 000 25130	SMPS(PSU)
LJ44-00099A	9965 000 26195	SUB PSU

PLAY

In questa impostazione, il display mostra il numero del programma attuale. Questa è la modalità da sceglhere per le tipiche prestazioni dal vivo, in quanto vi permette di passare facilmente da un programma all'altro con i pedali.

A0→A9 b0→b9 C0→C9 d0→d9	Indica la lettera del banco e il numero del programma in corso.

COMP/LIMIT (Compressore/Limitatore)

C1→C9	**Compressione.**	Aggiunge sostegno e scorrevolezza diminuendo il range dinamico.
L1→L9	**Limiting.**	Mantiene il volume originale, ma smorza i picchi più forti.
OF	**Off.**	Spegne il COMP/LIMIT.

TYPE (guitar modeling)

CL	**Clean.**	Il suono pulito, naturale di una chitarra acustica di qualità.
Ar	**Warm.**	Un suono scuro, profondo, tipico di chitarre in denso palissandro o mogano.
br	**Bright.**	Accentua le frequenze più alte per un suono frizzante solitamente trovato in chitarre acustiche dal corpo più piccolo.
rY	**Rhythm.**	Un suono pieno, caldo, ottimo per parti dal ritmo strumpellante.
Jb	**Jumbo.**	Fornisce un po' più di gamma bassa a quel suono associato a chitarre acustiche dal corpo grande.
d0→d9, dP	**Drive.**	Aggiunge mordente al vostro suono acustico, come se steste suonando con un amplificatore a tubo e premendo il gain. Valori maggiori significano un maggiore drive.
OF	**Off.**	Spegne DIST.

Downloaded from www.Manualslib.com manuals search engine

8 12 ACER_LCD_G24_SCHEMATICS_FUNCTION_KEY

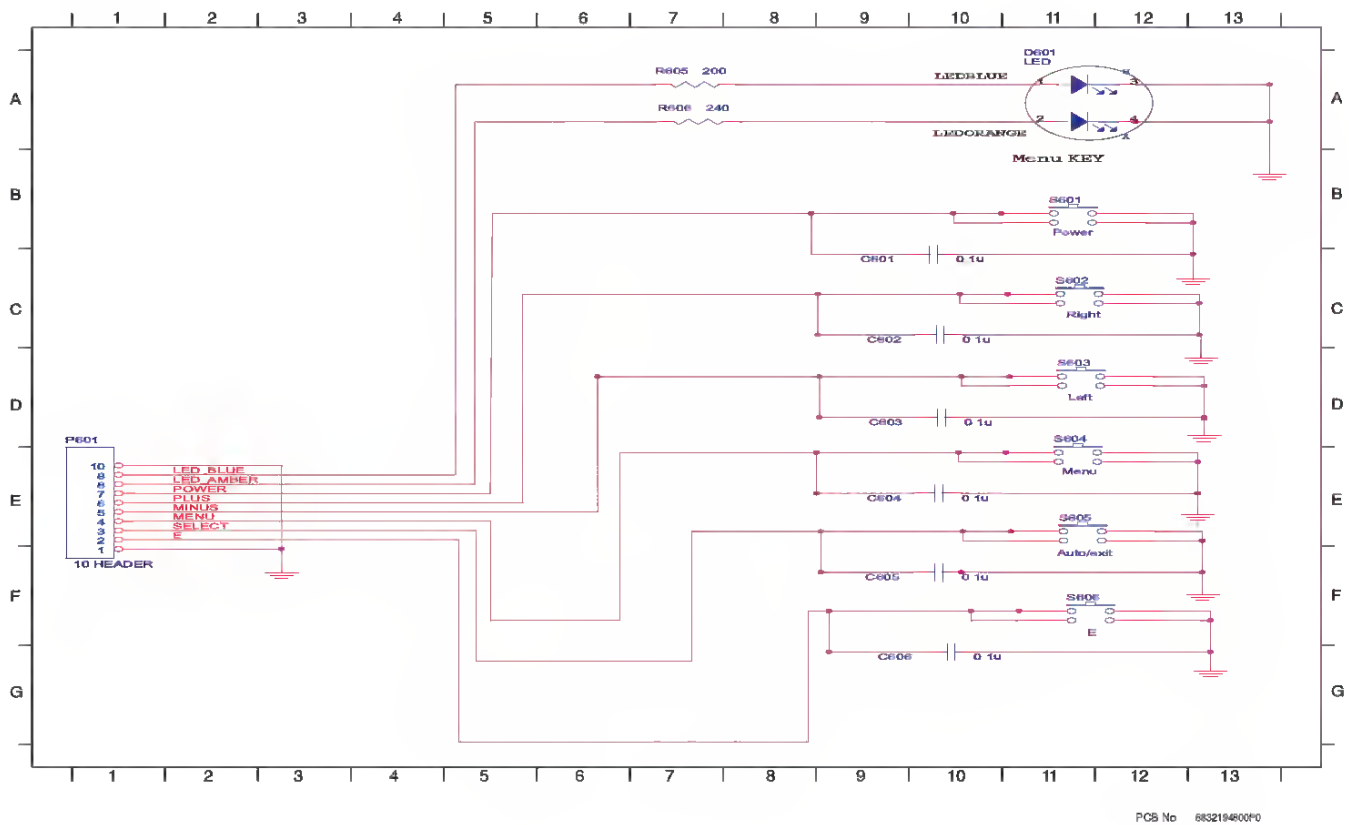

PCB No 6832194800P0

Downloaded from www.Manualslib.com manuals search engine

4.3 Printer Sharing in Windows 98

In order to share your printer with other stations of the same across the network, you have to set it as a network printer—the instructions are as follows:

1. Click the " Start " button, point to the " Settings ", and then click " Printers ".

2. In the Printers window, click the printer you want to share.

3. Click "Sharing" on the "File" menu.

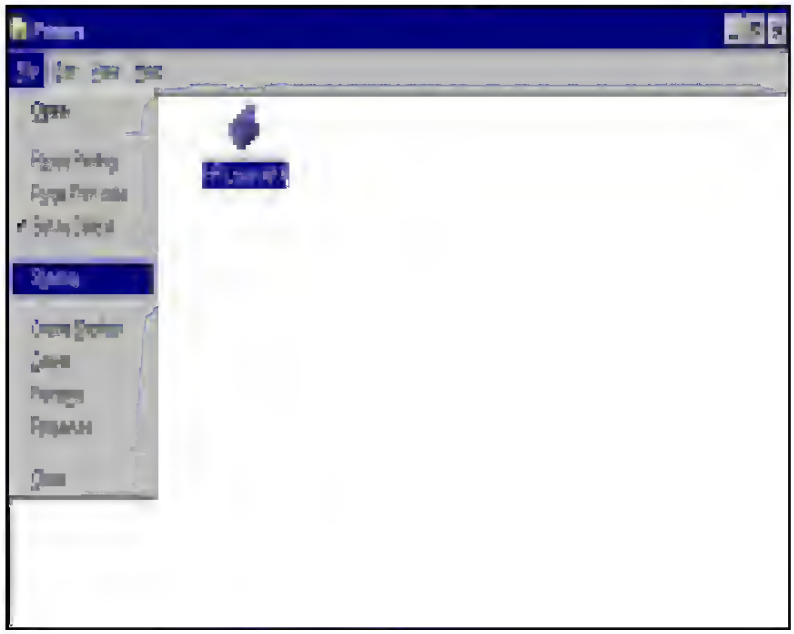

Downloaded from www.Manualslib.com manuals search engine

>ETHERNET SWITCH STATUS > RX PACKETS DROPPED

Displays a counter of all received data packets that were unable to be processed due to congestion inside the TRACER 5045 bridge (for both the local and remote TRACER 5045 units). Use this data as an indicator of congestion inside the TRACER 5045 bridge.

>ETHERNET SWITCH STATUS > RX PACKET ERRORS

Displays a counter of all received data packets that are greater than or equal to 64 bytes in length and have either a FCS error or an alignment error (for both the local and remote TRACER units).

© 2003 ADTRAN, Inc

Downloaded from www.Manualslib.com manuals search engine

HA/F100 Fibre Channel Data Paths

The Compaq StorageWorks RAID Array 4000 storage system (formerly Compaq Fibre Channel storage system) is the mechanism with which ProLiant Clusters implement shared storage. Generally, the storage system consists of Compaq StorageWorks Host Adapters (host bus adapters) in each server, a Compaq StorageWorks Fibre Channel Storage Hub, a Compaq StorageWorks RA4000 Controller (array controller), and a Compaq StorageWorks RAID Array 4000 into which the SCSI disks are placed.

The RA4000 storage system has two distinct data paths, separated by the storage hub:

- The first data path runs from the host bus adapters in the servers to the storage hub.
- The second data path runs from the storage hub to the RA4000.

The effects of a failure will vary depending on whether the failure occurred on the first or second data path.

Failure of the Host Bus Adapter-to-Storage Hub Data Path

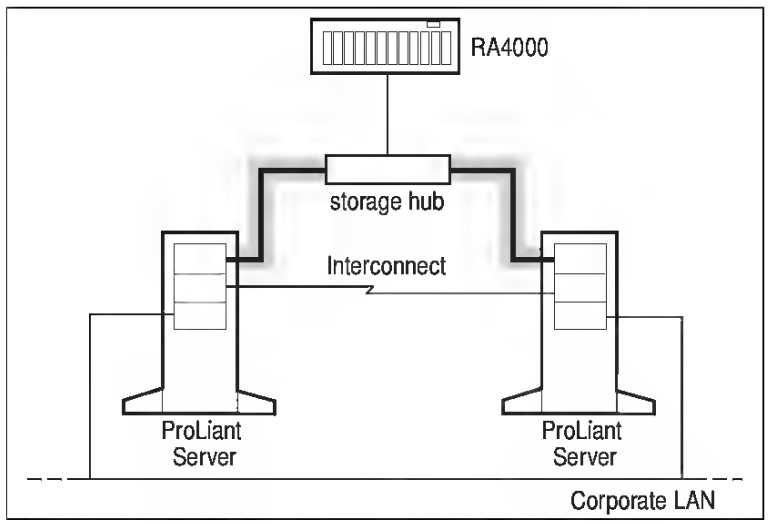

Figure 2-10. Host bus adapter-to-storage hub data path

Downloaded from www.Manualslib.com manuals search engine

Adjusting settings

Activating or deactivating connections

Open the *Application menu* and tap **Settings** to manage your connection settings.

Item	Description
SIM management	Turn the data connection on or off and set roaming preferences.
Wi-Fi	Turn the Wi-Fi function on or off.
Bluetooth	Turn the Bluetooth function on or off.
Data usage	View an estimate of the mobile data used for your SIM.
More...	Access additional connection settings: **Airplane mode**: Disable all wireless connections so you can safely use this device onboard an aircraft. **Default SMS app**: Choose which app serves as the default SMS app. **Tethering & portable hotspot**: Share your phone's mobile data connection via USB or as a portable Wi-Fi hotspot. **VPN**: Set up and manage Virtual Private Networks. **Mobile networks**: Set your options for connecting to mobile networks. **USB Internet**: Share your computer's internet connection via a USB cable. **See Internet sharing on page 52**.

If your phone is in Airplane mode, the option to turn Bluetooth on will be disabled. Please refer to **Putting your smartphone in Airplane mode on page 49** for instructions on turning Airplane mode on or off.

Adjusting Bluetooth settings

You can use Bluetooth to exchange information between your smartphone and other mobile devices.

Downloaded from www.Manualslib.com manuals search engine

REGLAGE DE L'HORLOGE

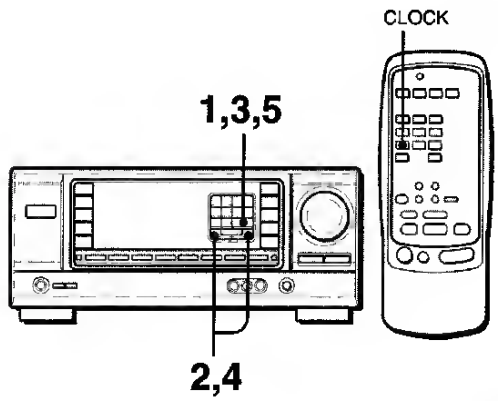

Quand le cordon secteur est reccordé au secteur pour la première fois, l'horloge clignote sur l'afficheur.
Réglez-la de la façon suivante quend l'ampli-tuner est éteint.

1 Appuyez sur la touche SET.
L'heure clignote.

2 Appuyez aur la touche DOWN▼ ou UP▲ pour désigner l'heure.

3 Appuyez sur la touche SET pour valider l'heure.
L'heure cesse de clignoter et les minutes clignotent.

4 Appuyez sur la touche DOWN▼ ou UP▲ pour désigner les minutes.

5 Appuyez sur la touche SET pour valider les minutes.
Les minutes cessent de clignoter sur l'afficheur et l'horloge se met en marche à partir de 00 seconde.

Pour remettre l'horloge à l'heure
Appuyez sur l'interrupteur POWER pour mettre l'ampli-tuner hors tension. Appuyez sur la touche SET et effectuez les opérations 1 à 5 ci-dessus.

Pour afficher l'heure actuelle
Appuyez sur la touche CLOCK de la télécommande. L'heure est affichée pendant 4 secondes.

Pour passer au standard de 24 heures
Appuyez sur l'interrupteur POWER tout en tenent la touche UP▲ ou DOWN▼ enfoncée pendant que l'heure est affichée.
Répétez la même opération pour rétablir le standard de 12 heures.

Si l'affichage de l'heure clignote quand l'ampli-tuner est hors tension
Il y e eu une interruption de courent. L'horloge doit être remise à l'heure.
Si l'alimentation est interrompue pendant plus de 24 heures, tous les réglages mémorisés après l'achat doivent être de nouveau effectués.

REGLAGE DE LA MINUTERIE D'ARRET

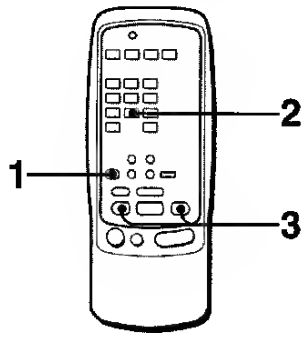

L'ampli-tuner peut être autometiquement mis hors tension à une heure précise.

Utilisez la télécommande.

1 Appuyez sur la touche AIWA RECEIVER.

2 Appuyez sur la touche SLEEP.

3 En l'espace de quatre secondes, désignez le temps de fonctionnement de l'ampli-tuner en appuyant sur la touche UP▶▶I ou DOWNI◀◀.
A chaque pression sur la touche, le temps chenge per incréments de 5 minutes de 5 à 240 minutes.

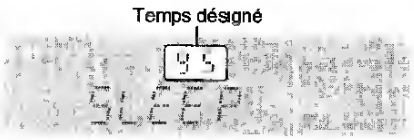

Pour vérifier le temps restant jusqu'à la mise hors tension
Appuyez une fois sur la touche SLEEP. Le temps restent est affiché pendant quatre secondes.

Pour arrêter la minuterie
Appuyez deux fois sur la touche SLEEP pour que "SLEEP" disparaisse de l'afficheur.

Downloaded from www.Manualslib.com manuals search engine

Slideshow Display

The slideshow function enables you to playback your images automatically in sequential order as a slide show. This is a very useful and entertaining feature for reviewing recorded images and for presentation.

1. Set the mode dial to [▶] and power on the camera.
   - The last image frame appears on the LCD monitor.
2. Press the **MENU** button.
   - The menu screen appears.
3. Select Slide Show by using the ▲ or ▼ button.
4. Press the **SET** button.
   - The slideshow starts at 3 seconds interval and [▭] is displayed on the LCD monitor.
   - To stop the slideshow display, press the **SET** button.

Note :

- The Auto Off function does not operate during the slide show.

Downloaded from www.Manualslib.com manuals search engine

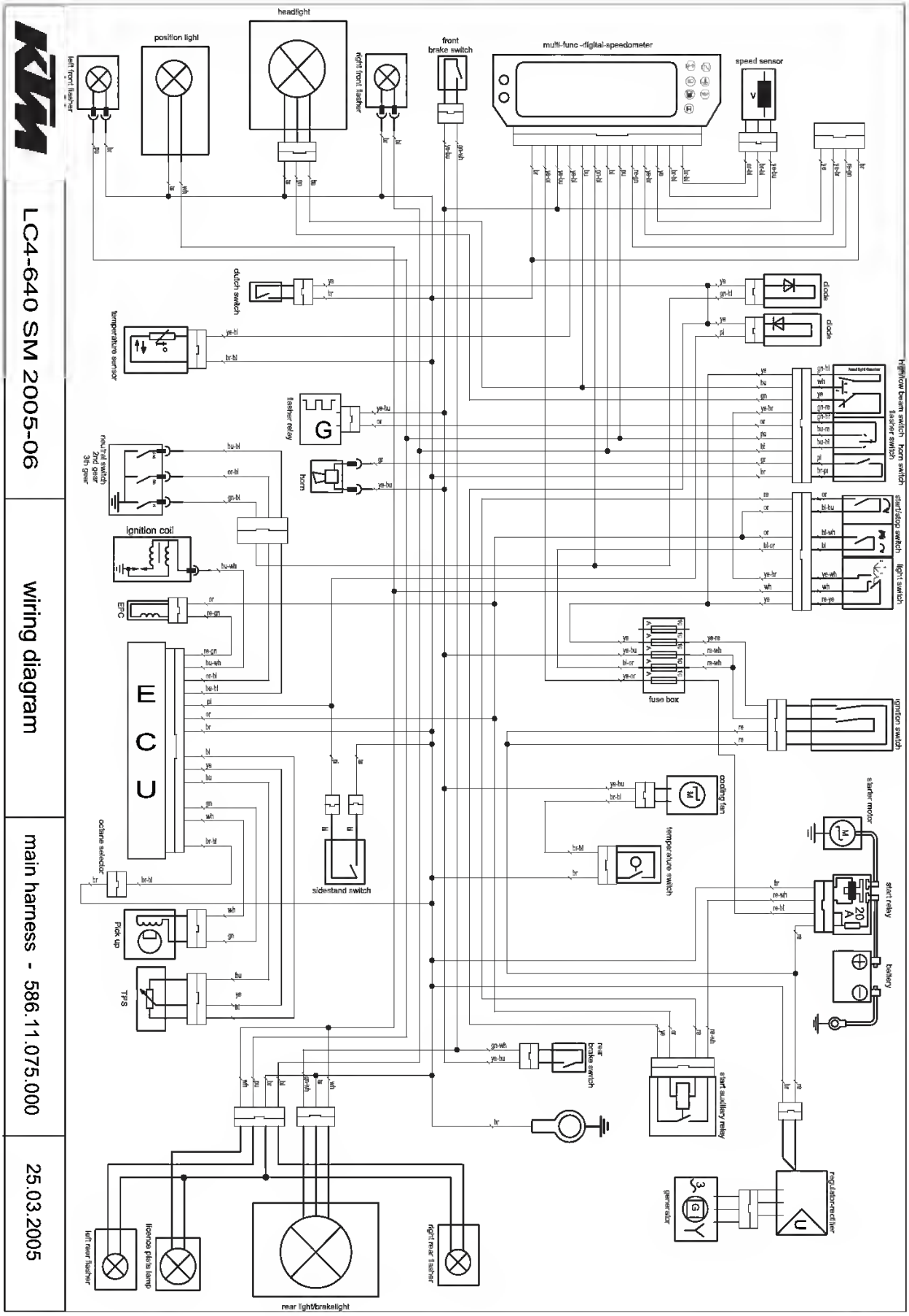
LC4-640 SM 2005-06
wiring diagram
main harness - 586.11.075.000
25.03.2005
headlight
position light
left front flasher
right front flasher
front brake switch
multi-func.-digital-speedometer
speed sensor
clutch switch
temperature sensor
flasher relay
horn
diode
diode
high/low beam switch
flasher switch
horn switch
start/stop switch
light switch
neutral switch 2nd gear 3th gear
ignition coil
EPC
E C U
fuse box
ignition switch
cooling fan
temperature switch
starter motor
start relay
battery
octane selector
Pick up
TPS
sidestand switch
rear brake switch
start auxiliary relay
generator
regulator-rectifier
left rear flasher
license plate lamp
rear light/brakelight
right rear flasher

Downloaded from www.Manualslib.com manuals search engine

Problem	Cause	Remedy	See page
No sound.	Incorrect input or output cable connections.	Connect the cables properly. If the problem persists, the cables may be defective.	16
	If a DVI-HDMI cable is used to connect the unit with an external component, then it is necessary to use an audio input jack for a different input to output audio.	Display the HDMI Input Option menu for the connected cable, select "Audio In", and select the jack to use for audio input.	38
	Speaker connections are not secure.	Secure the connections.	12
	The HDMI components connected to the unit do not support the HDCP copy protection standards.	Connect HDMI components that support the HDCP copy protection standards.	38
	The audio input into the device is set to playback through the TV.	In the Setup menu, set the HDMI Audio Out ("Sound Setup" → "HDMI Audio Out") to other than "TV".	45
	No appropriate input source has been selected.	Select an appropriate input source with 4 **Input selector** (on the remote control).	25
	The volume is turned down or muted.	Turn up the volume.	—
	Signals that this unit cannot reproduce are being input from a source component, such as a CD-ROM.	Use an input source that has signals that can be reproduced on this unit.	—
No picture.	A video jack (ex. Video input → HDMI output) type different to the input video is being used to try to display content on the TV.	Use video jacks of the same type (ex. Video input → Video output) to connect to the TV.	14
	An appropriate video input is not selected on the TV.	Select an appropriate video input on the TV.	—

Problem	Cause	Remedy	See page
No sound is output from a specific speaker.	The speaker is malfunctioning. Check the Speaker indicators on the front panel display. If the corresponding indicator lights up, connect another speaker and check if sound is output.	If sound is not output, the unit may be malfunctioning.	7
	The playback component or speakers are not connected properly.	Connect the cables properly. If the problem persists, the cables may be defective.	12, 16
	Output from that speaker is disabled.	Check the Speaker indicators on the front panel display. If the corresponding indicator is turned off, try the following. 1) Change to a different input source. 2) With the selected sound field program, sound is not output from that speaker. Select another sound field program. 3) "None" may have been selected for that speaker on this unit. Display "Speaker Setup" in the Setup menu, and set respective parameters to enable output from that speaker ("Speaker Setup" → "Config").	7, 41
	The volume of that speaker is set to the minimum in "Speaker Setup" in the Setup menu.	Display "Speaker Setup" in the Setup menu and adjust the volume ("Speaker Setup" → "Level").	42
	(If hardly any sound comes from one channel) Speaker output balance is not set correctly.	Balance the volume of each speaker from "Level" in the Setup menu ("Speaker Setup" → "Level").	42
	Sound may not be output from certain channels, depending on the input source or sound field program.	Try another sound field program.	26
Only the center speaker outputs substantial sound.	When a monaural source sound field program is applied, for some surround decoders, sound from all channels is output from the center speaker.	Try another sound field program.	26

Downloaded from www.Manualslib.com manuals search engine

English

Acer Incorporated
8F, 88, Sec 1, Xintai 5th Rd , Xizhi
New Taipei City 221, Taiwan

Declaration of Conformity

We,

Acer Incorporated
8F, 88, Sec 1, Xintai 5th Rd , Xizhi, New Taipei City 221, Taiwan
Contact Person Mr RU Jan, e-mail ru_jan@acer.com.tw

And,

Acer Italy s.r.l
Via Lepetit, 40, 20020 Lainate (MI) Italy
Tel +39-02-939-921, Fax +39-02 9399-2913
www.acer.it

Declare under our own responsibility that the product

Product:	**DLP Projector**
Trade Name:	**Acer**
Model Number:	**P1173/M302/PE-S33/V22S/AS315/QSV1308/ X1171/D201/EV-S52/V11S/AS203/QSV1337 X1173/D202/EV-S53/V20S/AS303/QSV1306/ X1173A/D202P/EV-S53T/V21S/AS305/QSV1307/ X1173N/D202A/EV-S53E/QSV1328/X1173H/D202D/EV-S53H/QSV1309/ X1273/D212/EV-X53/V20X/AX302/QNX1310/ X1273N/D212A/EV-X53E/QNX1329/X1273H/D212D/EV-X53H/QNX1311/ X1373W/D222/EV-W53/QWX1312/X1373WH/D222D/V-W53H/QWX1313 series**

To which this declaration refers conforms to the relevant standard or other standardizing documents

- EN55022:2010 Class B, EN 55024:2010
- EN61000-3-2:2006+A1:2009+A2:2009, Class A
- EN61000-3-3:2008
- EN 60950-1:2006/A11:2009/A1:2010+A12:2011
- Regulation (EC) No. 1275/ 2008, EN 62301:2005
- EN50581:2012

We hereby declare above product is in compliance with the essential requirements and other relevant provisions of EMC Directive 2004/108/EC, Low Voltage Directive 2006/95/EC and RoHS Directive 2011/65/EU and Directive 2009/125/EC with regard to establishing a framework for the setting of ecodesign requirements for energy-related product.

Year to begin affixing CE marking 2013.

RU Jan/Sr. Manager
Regulation Center, Acer Inc.

Oct. 22, 2013 -
Date

Downloaded From projector-manual.com Acer Manuals

Downloaded from www.Manualslib.com manuals search engine

4. The PPC without the rear cover.

Figure A.4 The PPC without the rear cover

5. Remove the PCI riser card.

Figure A.5 Removing the PCI riser card

Downloaded from www.Manualslib.com manuals search engine

In a short period of time, the computer will display the following prompt:

"IS THE ET PART OF YOUR SYSTEM?"

This prompt is for the calibration and testing of the instrument using the test system (Electronic Tool) at the factory. In response to this prompt, press continue. Shortly, the following prompt will be displayed:"

DO YOU WISH TO TEST THE HIGH-FREQ OR LOW-FREQ SECTION? (HF/LF)

When this prompt is displayed, the program has been initialized correctly; testing, adjusting, and/or troubleshooting may continue from this point.

6-8. Selecting a Menu

Two menus are available in the -hp-35601A test program. They correspond to the high-frequency section and the low-frequency section of the -hp- 35601A. The High Frequency Menu is shown in Table 6-2:

Table 6-2. High Frequency Menu of the -hp-35601A Test Program

-hp-9836 Special Function Key	-hp-9845A Spectat Function Key	Description
K0	K0	Perform Tests Automatically (sequentially)
K1	K1	Bypass Path Test
K2	K2	2MHz Lowpass Filter Test
K3	K3	x100 Amplifier Test
K4	K4	Pads in Tracking Generator Input Path
K5	K5	Adaptive Coupler Test
K6	K6	Digital-to-Analog Convertor Test
K7	K7	Output Attenuator Test
K8	K8	Wein Bridge Oscillator Test
K9	K9	3582 Noise Input to Summing Junction Test
Shift K0	K10	Tracking Generator Input to Summing Junction Test
Shift K1	K11	Ouput Path to 3582/3585
Shift K2	K12	Programmable Gains Test
Shift K2	K13	1.5GHz Mixer DC Offset Test
Shift K5	K15	INITIALIZE PROGRAM - CHOOSE HF/LF MENU
Shift K6	Shift K11	"SWITCH" (-hp-35601A control subprogram)

The Low-Frequency Menu is shown in Table 6-3:

Table 6-3. Low Frequency Menu of the -hp-35601A Test Program

-hp-9836 Special Function Key	-hp-9845B Spectat Function Key	Description
K0	K0	Perform Tests Automatically (sequentially)
K1	K1	350kHz/370kHz Synthesizer Test
K2	K2	Voltage Controlled Crystal Oscillator Test
K3	K3	350kHz Bandpass Filter Test
K4	K4	X20 and X5 Amplifiers Test
K5	K5	Switchable Lowpass Filters Test
K6	K6	Test/Adjust Channel A DC offset
K7	K7	HP-IB with digital signature analysis
Shift K5	K15	INITIALIZE PROGRAM - CHOOSE HF/LF MENU
Shift K6	K11	"SWITCH"

Downloaded from www.Manualslib.com manuals search engine

POST Error Messages *Continued*

Error Code	Audible Beeps L=Long S=Short	Probable Source of Problem	Action
1764-Slot x Drive Array - Capacity Expansion Process is temporarily disabled (followed by one of the following): Expansion will resume when Array Accelerator has been reattached. Expansion will resume when Array Accelerator has been replaced. Expansion will resume when Array Accelerator RAM allocation is successful. Expansion will resume when Array Accelerator battery reaches full charge. Expansion will resume when automatic data recovery has been completed.			Reattach or replace Array Accelerator, wait until the Array Accelerator batteries have charged, or for Automatic Data Recovery to complete, as indicated.
1765-Slot x Drive Array Option ROM Appears to Conflict With an ISA Card. ISA cards with 16-bit memory cannot be configured in memory range C0000 to DFFFF along with the SMART-2/E 8-bit Option ROM due to EISA bus limitations. Please remove or reconfigure your ISA card.			Remove or reconfigure conflicting ISA cards. Disable "shared memory" on any ISA network cards that may be installed.
1766-Slot x Drive Array requires System ROM Upgrade. Run Systems ROMPaq Utility.			Run the latest Systems ROMPaq Utility to upgrade your System ROMs.
1767-Slot x Drive Array Option ROM is Not Programmed Correctly or may Conflict with the Memory Address Range of an ISA Card. Check the Memory Address Configuration of installed ISA Card(s) or run Options ROMPaq Utility to attempt SMART-2/E Option ROM Reprogramming.			Remove or reconfigure conflicting ISA cards, especially any cards that are not recognized by the System Configuration Utility. Try reprogramming the SMART-2/E Controller's ROMs using the latest Options ROMPaq (version 2.29 or higher).
1768-Slot x Drive Array -Resuming logical drive expansion process.	None	SMART-2 Controller error	No action required. Appears whenever a controller reset or power cycle occurs while array expansion is in progress.

Continued

Downloaded from www.Manualslib.com manuals search engine

6-8. Bypass Path Test

This test checks the continuity of the signal path shown in Figure 6-1. A signal is input to the 0-40MHz input of the Ap-3560A, it is then measured with an Ap-3455A voltmeter at the 500 OUTPUT TO 3560A. The program displays equipment set-up instructions, performs the test, displays the desired results, tells if a retest is desired, and prints the results.

Initiating the Bypass Path Test

With the High Frequency Meter displayed, press special function key (SFR) K1 to initiate the test. After initialization, follow the instructions displayed on the instrument.

What if the Test Fails?

After determining that the test continuity was continuity presently, determine which relay is bad. This can be accomplished using a scope to see in which relay the input signal is not present. (Also, "SWITCH" subprogram could be used to open and close the relays while checking the continuity of each relay.) Refer to Service Group Two for schematics and component location. In all likelihood, only one of the relays is bad. If, however, the entire instrument is not responding to HP-IB continuity presented in Service Group Four for HP-IB troubleshooting.

Equipment Set Up

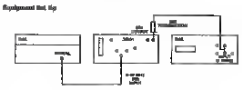

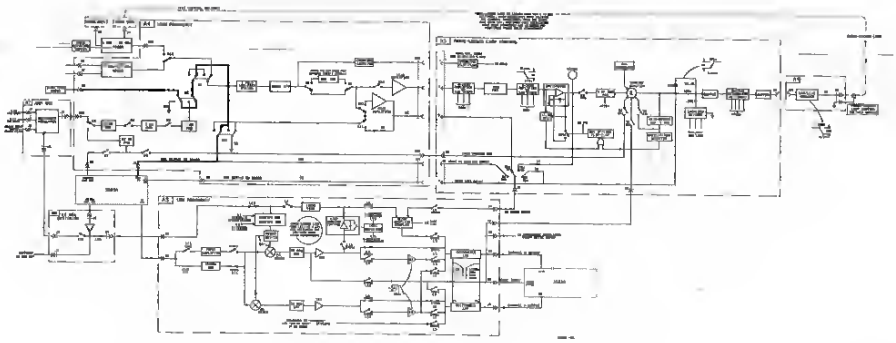

Figure 6-1. Bypass Path Test

Downloaded from www.Manualslib.com manuals search engine

verfp-2.book Page 52 Tuesday, October 5, 1999 1:30 PM

ASM Pro Suite

Advanced System Manager (ASM) Pro Suite is a desktop management tool designed to monitor performance, manage assets, and detect errors or potential system malfunctions in network systems. It helps the system administrators to spot errors or potential system malfunctions in the network devices through a single management station. This prevents machine breakdowns and reduces the enterprise's Total Cost of Ownership (TCO).

The basic features of ASM Pro Suite are as follows:

- **Remote Complementary Metal Oxide Semiconductor (CMOS) Update** - allows update of Setup and Time/Date settings of the computers connected in a network through a single management station.
- **Remote Flash Basic Input/Output System (BIOS) Update** - makes the upgrade of the BIOS software instructions of the computers connected in a network easier through a single management station.
- **Remote Console**- enables update, upload, and transfer of programs and files between computers connected in a network. System administrators find this function very useful especially when maintaining, diagnosing, and troubleshooting computers.
- **LANDesk Client Manager (LDCM)** - broadens the functionality of ASM Pro Suite by allowing desktop management via the Web, standard network, or dial-up connections. It is compatible with the leading management specifications, such as Wired for Management 2.0, Desktop Management Interface (DMI) v2.0, and others.
    - **System Information** - helps locate available computers in your network and collects general computer information like operating system, protocols, addresses, etc.
    - **Configuration Information** - shows the configuration of each device (i.e., BIOS, I/O ports, hard disks, network interface cards, etc.) installed in each computer in a network.
    - **Fault Management** - checks the computers for hardware errors and observes whether or not a certain device has exceeded its threshold value. If so, the program notifies the system administrator or shuts down the computer to protect it from further damage.

8.2 STRATEGIES FOR ASSEMBLING PATTERNS AND SONGS

Ideally, you should be able to translate your inspirations into tangible form with a minimum amount of effort. The following tips and techniques help speed up the process of creating Patterns and Songs.

8.2A Create Fills Quickly with the Copy Function

Many times a Fill will simply be a variation on another Pattern, but with a few minor differences to add variety or serve different musical purposes. To save time, use the Copy function to copy the main Pattern to the Fill, then add variations to the Fill in real time or with Step Edit mode.

8.2B Assemble Short Patterns into Longer Patterns with the Copy Function

It's less time-consuming to work with short Patterns, since you don't have to wait for the entire Pattern to cycle through before overdubbing or "spot erasing" events. After assembling several short Patterns, use the copy function to append Patterns into a longer Pattern. *Example:* Create four eight-beat Patterns, then use the copy function to combine these into a single 32-beat Pattern.

8.2C Save Memory Through Song Steps

Whenever possible, repeat Patterns using Song steps rather than program long Patterns. *Example:* Suppose you have a 16-measure figure where the first three groups of four measures are identical, and the final group of four measures provides some sort of variation. Recording this as one 16-measure Pattern will take up more memory than recording two Patterns (one of the first group of four measures and one of the last group of four measures), and while in Song mode repeating the first group three times followed by the last group once.

8.2D Odd Time Signatures

For time signatures based on quarter notes, changing the number of beats in a Pattern can also change the time signature. *Example:* Programming a Pattern length seven beats long will yield a measure of 7/4. Programming a Pattern length 14 beats long will yield two measures of 7/4. Time signatures such as 2/4, 3/4, 5/4, 9/4, and so on are easy to implement.

For time signatures based on eighth notes, it's easiest to double the tempo so that each beat lasts an eighth note instead of a quarter note. However, you will have to take this into account when quantizing and setting the metronome—if the display says a quarter note, read it as an eighth note.

Plan carefully when mixing odd time signatures within the same piece. If some Patterns use a time signature based on quarter notes and others on eighth notes, you will need to double the tempo for the quarter note-based Patterns to match up with the eighth-note based Patterns.

Downloaded from www.Manualslib.com manuals search engine

System Board Switches

Table 4-2 defines the System Configuration setting switches, ㉛ in Figure 4-2, on the system board. The Open (OFF) position is the default configuration for each switch.

Table 4-2
System Configuration Setting Switches

Switch	Open (Off) Position	Closed (On) Position
1 Video	Enable integrated video	Disable integrated video
2 Lock Configuration	Configuration can be changed	Configuration can not be changed
3 Rack-Mount	System is tower configuration	System is rack-mount configuration
4 Diskette Override	Diskette boot is controlled by configuration	Diskette is enabled for booting regardless of configuration
5 Password Enable	Power on password is enabled	Power on password is disabled
6 Maintenance*	NV RAM is valid	NV RAM is invalidated, configuration is lost

* See the *ProLiant 3000 Service and Maintenance Guide* for information on the use of this switch.

Writer: Cheri Stewart Project: Compaq ProLiant 3000 Servers Setup and Installation Guide Comments: 179776-002
File Name: E-CH04.DOC Last Saved On: 1/12/99 1:28 PM
COMPAQ CONFIDENTIAL - NEED TO KNOW REQUIRED

Downloaded from www.Manualslib.com manuals search engine

Use the tip of your stylus to lightly press the **Reset** button inside the stylus holder.

Clean boot

Warning! You should only perform a clean boot when all other reset options have failed to restore your smartphone to an operational state.

A clean boot will restore your smartphone to the factory settings.

Warning! This will erase all your personal information, any contacts stored on your phone and any programs you installed.

If your screen is responding to stylus input: Go to **Start > Utilities > Default Settings**. Read the warning information and enter the security code in the empty textbox. Tap **OK** to proceed.

If your screen is not responding to stylus input: Press the reset button, the press Power, Call button and End button at the same time.

Downloaded from www.Manualslib.com manuals search engine

Whenever any of the following error conditions occur, the amber fault LED on the front of the pedestal will turn on. When alarm switch S1 on the rear panel of the pedestal is in the up (enabled) position, the audible alarm will sound whenever one of the following conditions occurs:

- Loss of AC power to one of the power supplies
- Failure of either power supply fan
- UPS not connected
- UPS power failure
- UPS output too low
- Temperature exceeds 123°F (50°C)
- One of the +12 VDC outputs is less than + 9.85 VDC
- One of the +5 VDC outputs is less than + 3.95 VDC
- Miscellaneous error condition
- A controller error condition exists
- External fault

Replacing Components (FRUs)

This section describes how to replace an FRU in the RAID Array 3000 pedestal. The information is divided into the following subsections:

- Removing the pedestal door
- Replacing an SBB
- Replacing a power supply
- Replacing the controller
- Replacing the EMU board
- Replacing the UPS
- Replacing a controller memory cache module

Downloaded from www.Manualslib.com manuals search engine

INDICE DE LAS PARTES

Se indican las instrucciones principales de cada parte

NOMENCLATURE

Les principales instructions concernant chaque partie sont indiquées.

	A Main unit Unidad principal Appareil principal	B Remote control Control remoto Télécommande	Pages Páginas Pages
1	TUNER/BAND	TUNER BAND	20-21
2	TAPE/DECK 1/2	TAPE DECK 1/2	30-31
3	Disc compartment Compartimiento de discos Compartiment à disques	—	24-25
4	POWER	POWER	12-13
5	DEMO	—	12-13
6	● REC/REC MUTE	● REC/REC MUTE	34-35
7	SYNCHRO DUBBING NORMAL/HIGH	—	38-39
8	II SET	II SET	14-15, 22-23, 24-25, 30-31, 52-53
9	PHONES	—	12-13
10	DOLBY NR	—	30-31
11	REV MODE [DECK 2]	—	30-31
12	CD EDIT/CHECK	EDIT/CHECK	24-25, 40-45, 50-51
13	Deck 1/Platina 1/Platine 1	—	30-31
14	VOCAL FADER/MULTIPLEX	KARAOKE VOCAL FADER/MULTIPLEX	48-49
15	■ CLEAR	■ CLEAR	12-13, 14-15, 22-23, 24-25, 28-29, 30-31, 34-35
16	Display window Visualizador Fenêtre d'affichage	—	
17	VIDEO/AUX	VIDEO/AUX	56-57
18	CD	CD	24-25
19	DISC CHANGE	—	26-27
20	⏏ OPEN/CLOSE	⏏ OPEN/CLOSE	24-25
21	DISC DIRECT PLAY	DISC DIRECT PLAY	24-25
22	Sensor for remote control Sensor para el control remoto Capteur pour telécommande	—	
23	VOLUME	VOLUME (∧, ∨)	16-17
24	T-BASS	T-BASS	16-17
25	BBE	—	16-17
26	SURROUND	—	18-19
27	ELECTRONIC GRAPHIC EQUALIZER	GEQ	16-17
28	⏭, ▶▶ TUNING UP	⏭, ▶▶ UP	14-15, 20-21, 24-25, 30-33
29	MIC MIXING	—	46-47
30	DIGITAL ECHO	—	46-47
31	MIC 1, MIC 2	—	46-47
32	◀◀, ⏮ TUNING DOWN	◀◀, ⏮ DOWN	14-15, 20-21, 24-25, 30-33
33	Deck 2/Platina 2/Platine 2	—	30-31
34	◀▶ DIRECTION/PRESET	◀▶ DIRECTION/PRESET	22-23, 24-25, 30-31
35	—	PRGM	28-29, 50-51
36	—	SLEEP	54-55
37	—	TIMER	52-53
38	—	1 — 0, +10	22-23, 26-29, 40-44, 50-51
39	—	RANDOM	26-27
40	—	CLOCK	14-15
41	—	REPEAT/MONO TUNER	20-21, 26-27
42	—	KARAOKE ENTER	50-51

Downloaded from www.Manualslib.com manuals search engine

B.20 Front Panel Connector (CN22)

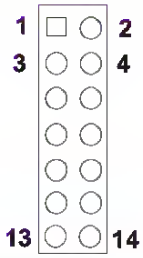

Table B.20: Front panel Connector (CN22)			
Pin	**Signal**	**Pin**	**Signal**
1	HDD LED+	2	HDD LED-
3	Power LED+	4	GND
5	Suspend LED	6	GND
7	LAN ACT+	8	LAN ACT-
9	LAN Link+	10	LAN Link-
11	VCC_DUAL	12	ATX Power Button
13	GND	14	Reset

B.21 SATA Connector 1 (CN23)

Table B.21: SATA Connector 1 (CN23)	
Pin	**Signal**
1	GND
2	TX0
3	TX0#
4	GND
5	RX0#
6	RX0
7	GND

Downloaded from www.Manualslib.com manuals search engine

Pos	12NC Code	Description
C310	040067141061	CAP CER 100NF 50V 10% X7R 0603
C311	040067141061	CAP CER 100NF 50V 10% X7R 0603
C313	040067141061	CAP CER 100NF 50V 10% X7R 0603
C314	040067141061	CAP CER 100NF 50V 10% X7R 0603
C315	620013061041	CAP MKT 100NF 63V 5% 5MM
C316	040067141061	CAP CER 100NF 50V 10% X7R 0603
C317	040067141061	CAP CER 100NF 50V 10% X7R 0603
C316	040067141061	CAP CER 100NF 50V 10% X7R 0603
C319	042414164761	CAP ELECT 47MF 16V 20%
C321	042414164761	CAP ELECT 47MF 16V 20%
C322	042446161061	CAP ELECT 10MF 16V 20%
C324	042446161061	CAP ELECT 10MF 16V 20%
C326	040732041061	CAP CER 100PF 50V 5% COG 0603
C327	040732041061	CAP CER 100PF 50V 5% COG 0603
C326	040732041061	CAP CER 100PF 50V 5% COG 0603
C329	040732041061	CAP CER 100PF 50V 5% COG 0603
C332	042416501051	CAP ELECT 1MF 50V 20%
C333	042416501051	CAP ELECT 1MF 50V 20%
C334	042416501051	CAP ELECT 1MF 50V 20%
C335	042416501051	CAP ELECT 1MF 50V 20%
C336	042416501051	CAP ELECT 1MF 50V 20%
C337	042416501051	CAP ELECT 1MF 50V 20%
C339	040031042261	CAP CER 22PF 50V 5% COG 0603
C340	040031042261	CAP CER 22PF 50V 5% COG 0603
C341	482205130006	0R00 JUMPER
C342	482212614487	6,2PF 0,5% 50V 0603
C353	532212611583	10NF 10% X7R 50V 0603 CER2
C354	040742022261	CAP CER 22NF 50V 5% X7R 0603
C355	040742022261	CAP CER 22NF 50V 5% X7R 0603
C356	042416501051	CAP ELECT 1MF 50V 20%
C357	042416501051	CAP ELECT 1MF 50V 20%
C358	042416501051	CAP ELECT 1MF 50V 20%
C359	042416501051	CAP ELECT 1MF 50V 20%
C360	532212611576	1NF 10% X7R 50V 0603
C361	532212611578	1NF 10% X7R 50V 0603
C362	532212611578	1NF 10% X7R 50V 0603
C363	040052043381	CAP CER 330NF 50V20-80%Y5V0805
C364	042140161071	CAP ELECT 100MF 16V 20%
C365	042140161071	CAP ELECT 100MF 16V 20%
C366	042140161071	CAP ELECT 100MF 16V 20%
C368	040052044661	CAP CER 470PF 50V 5% COG 0603
C369	042446502251	CAP ELECT 2 2MF 50V 20%
C370	482212613193	4.7NF10% X7R 63V

Pos	12NC Code	Description
C426	040052043381	CAP CER 330NF 50V20-80%Y5V0805
C429	040052043381	CAP CER 330NF 50V20-80%Y5V0805
C430	040052043381	CAP CER 330NF 50V20-80%Y5V0805
C431	040732041061	CAP CER 100PF 50V 5% COG 0603
C432	040732041061	CAP CER 100PF 50V 5% COG 0603
C433	040732041061	CAP CER 100PF 50V 5% COG 0603
C434	040732041061	CAP CER 100PF 50V 5% COG 0603
C435	040732041061	CAP CER 100PF 50V 5% COG 0603
C436	040732041061	CAP CER 100PF 50V 5% COG 0603
C437	042033901011	CAP ELECT 3 3MF 50V 20%
C438	042033901011	CAP ELECT 3 3MF 50V 20%
C439	042140161071	CAP ELECT 100MF 16V 20%
C441	042416501051	CAP ELECT 1MF 50V 20%
C442	042416501051	CAP ELECT 1MF 50V 20%
C446	042410252261	CAP ELECT 2200MF 25V 20%
C447	040732041061	CAP CER 100PF 50V 5% COG 0603
C448	040732041061	CAP CER 100PF 50V 5% COG 0603
C449	042194504751	CAP ELECT 4 7MF 50V 20%
C450	042194504751	CAP ELECT 4 7MF 50V 20%
C451	532212611583	10NF 10% X7R 50V 0603 CER2
C452	532212611583	10NF 10% X7R 50V 0603 CER2
C466	042416502261	CAP ELECT 22MF 50V 20%
C467	042416502261	CAP ELECT 22MF 50V 20%
C468	042416502261	CAP ELECT 22MF 50V 20%
C469	042416502261	CAP ELECT 22MF 50V 20%
C501	482212614241	CER1 0603 NPO 50V 330P COL R
C502	482212614241	CER1 0603 NPO 50V 330P COL R
C503	482212614241	CER1 0603 NPO 50V 330P COL R
C505	042446862251	CAP ELECT 2 2MF 250V 20%
C507	040031042261	CAP CER 22PF 50V 5% COG 0603
C508	620003134731	CAP MKT 47NF 630V 5% 10/15MM
C516	040040171021	CAP CER 1NF 2KV 10% BN
C600	996500012523	0 22 UF 50V 20%
C601	620004072241	CAP MKT 220NF 63V 10% 5MM
C602	620004014731	CAP MKT 47NF 100V 10% 5MM
C603	042446351071	CAP ELECT 100MF 35V 20%
C604	042416502261	CAP ELECT 22MF 50V 20%
C605	042416160001	CAP ELECT 22MF 160V 20%
C606	042414351081	CAP ELECT 2200MF 35V 20%
C607	042414254761	CAP ELECT 47MF 25V 20%
C609	620004001051	CAP MKT 10NF 50V
C610	040031042261	CAP CER 22PF 50V 5% COG 0603
C611	618014011161	CAP MKT 100NF 50V 5%

Downloaded from www.Manualslib.com manuals search engine

REMARQUE

Si "AUTO" eppereît quand on appuie sur **RHYTHM**, faire apparaître "MANUAL" en tournant **MULTI JOG** vers la gauche. En mode AUTO, le tempo est eutometiquement réglé et on ne peut pas eccéder à l'affichage de "Tempo". (Voir ci-après la description du mode AUTO.)

***2* Tourner MULTI JOG.**

Le rotetion vers le droite accélère le tempo. La rotation vers la gauche ralentit le tempo.

(Si une coupure se produit event la rotetion de le commande, repasser à l'affichege de "Tempo" en appuyant sur **RHYTHM**.)

Le tempo peut être changé dans les limites de 81 à 160.

REMARQUE

Le tempo de GAME n'est pas réglable.

Pour changer le niveau du volume du type de rythme

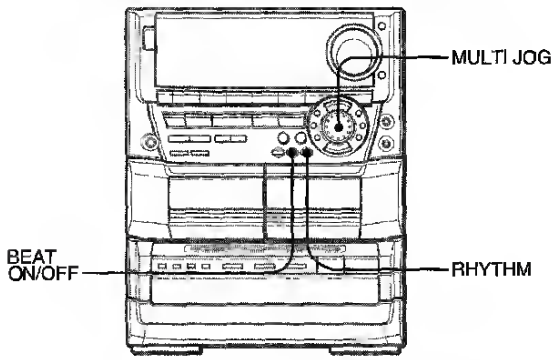

***1* Appuyer sur RHYTHM à plusieurs reprises jusqu'à ce que l'affichage indique "LEVEL X".**

***2* Tourner MULTI JOG.**

Trois niveaux, 1 - 3, sont disponibles.

Pour arrêter la fonction BEAT

Appuyer sur **BEAT ON/OFF**.

Le réglege de BEAT bescule entre "en service" et "hors service".

REMARQUE

Quand on interrompt ou arrête la lecture sur la source sonore, le fonction BEAT est automatiquement mise hors service.

Utilisation du mode AUTO

Le mode AUTO règle automatiquement le tempo du type de rythme courant de manière qu'il coïncide avec le tempo de la musique.

REMARQUE

Selon la musique, le mode AUTO risque de ne pes fonctionner correctement (avec de la musique dont le tempo est flou ou variable, par exemple).

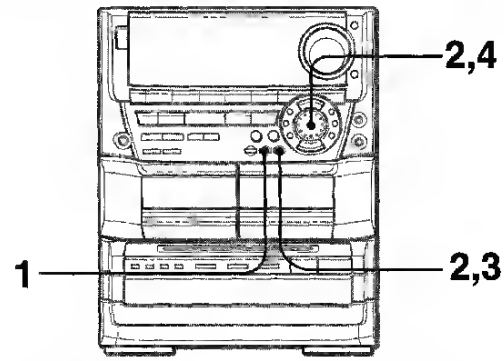

On peut laisser la musique démerrer avent d'effectuer l'étepe 1 ou inversement.

***1* Appuyer sur BEAT ON/OFF pour mettre la fonction en service.**

Le type de rythme courant est audible.

***2* En appuyant sur RHYTHM et en tournant MULTI JOG, changer le type de rythme et le réglage de niveau comme souhaité.**

***3* Appuyer sur RHYTHM de manière que l'affichage indique "MANUAL" ou "AUTO".**

***4* Tourner MULTI JOG vers la droite de manière que l'affichage indique "AUTO".**

Si "AUTO" est atfiché à l'étepe 3, tourner **MULTI JOG** vers la gauche de manière que l'affichage indique "MANUAL" avant d'effectuer l'étape 4.

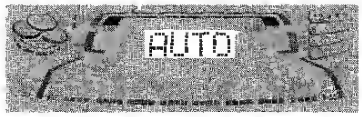

Lors du passage de MANUAL à AUTO, le niveau du type de rythme est autometiquement réduit à "1". Le niveau préréglé est rétebli quand l'epparell se synchronise sur le tempo de le musique.

Pendant que l'appareil essaie de se synchroniser sur le tempo de la musique, un indicateur bleu ressemblent à une cascade clignote sur les côtés de la pertie affichage d'égeliseur de spectre.

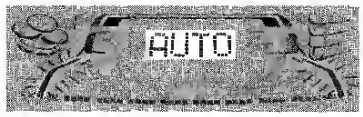

Ouend l'appareil se synchronise sur le tempo de la musique, l'affichage indique momentanément le tempo de la synchronisetion.

Selon les sources sonores (comme, par exemple, musiques dont le tempo est variable), toutefois, on peut voir différents tempos epparaissent l'un eprès l'autre sur l'affichage.

Downloaded from www.Manualslib.com manuals search engine

Surf the Net!

To surf the internet, you need a program called an internet browser. *Internet Explorer* provides an easy and secure web browsing experience. As soon as you have your internet access installed and you are connected, from Start, click the Internet Explorer tile or the icon located on the desktop and take your internet experience to a new level!

Acer website

To get you started why not visit our website, **www.acer.com**.

Acer is dedicated to provide you with on-going personalized support. Check out our *Support* section to get help tailored to your needs.

www.acer.com is your portal to a world of online activities and services: visit us regularly for the latest information and downloads!

Security

You are probably eager to explore everything the internet has to offer. In order for you to be safe online, Acer has pre-installed McAfee Internet Security Suite on your computer.

McAfee Internet Security Suite runs quietly in the background to block today's complex threats and protect your identity when you shop, bank, or browse online.

McAfee Internet Security Suite blocks online identity theft, detects and eliminates spyware, removes viruses and internet worms, protects against hackers.

Definitions

What is a virus?

Malicious software, typically called 'viruses', are programs designed to infect and damage computers. Most viruses are transmitted over the internet, emails or malicious web sites. A typical virus will replicate and pass itself undetected to multiple computers. Other forms of nuisance, such as Trojan horses, worms or spam can infect your

Downloaded from www.Manualslib.com manuals search engine

Setting the Audio options

There are a number of additional sound settings you can make using the **AUDIO PARAMETER** menu. The defaults, if not stated, are listed in bold.

Important

- Note that if a setting doesn't appear in the **AUDIO PARAMETER** menu, it is unavailable due to the current source settings and status of the receiver.

1 **Press RECEIVER to the receiver operation mode, then press AUDIO PARAMETER.**

2 **Use ↑/↓ to select the setting you want to adjust.**

Depending on the current status/mode of the receiver, certain options may not be able to be selected. Check the table below for notes on this.

3 **Use ←/→ to set as necessary.**

See the table below for the options available for each setting.

4 **Press RETURN to confirm and exit the menu.**

Audio parameter menu

Setting	What it does	Option(s)
MCACC (MCACC preset)	Selects your favorite MCACC preset memory when multiple preset memories are saved. When an MCACC preset memory has been renamed, the given name is displayed.	◄ M1: MEMORY 1 to M6: MEMORY 6 ► Default: **M1: MEMORY 1**
EQ (Acoustic Calibration EQ)	Switches on/off the effects of EQ Pro.	**ON** OFF
S.WAVE (Standing Wave)	Switches on/off the effects of Standing Wave Control.	**ON** OFF
Phase C+ (Phase Control Plus)	For discs created with standards other than Phase Control, the LFE channel is delayed upon recording in the first place. This function corrects for phase shifting on such discs. This function is particularly effective when playing multi channel music containing low frequency effects (LFE). When **AUTO** is selected, not only the low range delay but also the polarity and correlation are detected to achieve the optimum effect.	◄ AUTO/0 to 16 (ms) ► Default: **AUTO**
DELAY (Sound Delay)	Some monitors have a slight delay when showing video, so the soundtrack will be slightly out of sync with the picture. By adding a bit of delay, you can adjust the sound to match the presentation of the video.	◄ 0 to 800 (ms) ► Default: **0**
TONE (Tone Control)	Applies the treble and bass tone controls to a source, or bypasses them completely.	**BYPASS** ON
BASS <a>	Adjusts the amount of bass.	◄ –6 to +6 (dB) ► Default: **0** (dB)
TREBLE <a>	Adjusts the amount of treble.	◄ –6 to +6 (dB) ► Default: **0** (dB)

Setting	What it does	Option(s)
S.RTRV (Auto Sound Retriever) <b>	With the Auto Sound Retriever function, DSP processing is used to compensate for the loss of audio data upon compression, improving the sound's sense of density and modulation. Also, when a player supporting the Sound Retriever Link function is connected to the receiver by HDMI, by setting this to **ON**, the bitrate information of the compressed audio file being played on the player is acquired using the **Control** with HDMI function, and the sound is optimized based on this information (Sound Retriever Link).	**OFF** ON
ONR (Digital Noise Reduction)	May improve the quality of sound in a noisy source (for example, video tape with lots of background noise) when switched on. This only has an effect with 2 channel signal inputs. This mode is effective for contents with a sampling frequency of 48 kHz or less.	**OFF** ON
DIALOG E (Dialog Enhancement) <c>	Localizes dialog in the center channel to make it stand out from other background sounds in a TV or movie soundtrack. By moving from UP1 through UP2 and UP3 up to UP4, you can make the sound source seem to relocate upwards.	◄ OFF/FLAT/UP1/UP2/UP3/UP4 ► Default: **OFF**
AScale (Audio Scaler)	When **AUTO** is selected, **Hi-bit32**, **UpSampling** and **OFILTER** are automatically set to the optimum settings according to the 2 channel audio source's sampling frequency and bit rate to achieve high quality playback sound.	**MANUAL** AUTO
Hi-bit32 <d>	Creates a wider dynamic range with digital sources like CDs, DVDs or BDs. 16-, 20- and 24-bit PCM as well as compressed audio is requantized to 32 bits, and the high frequency component is interpolated upon data processing to enable smoother, more subtle musical expression.	**ON** OFF
UpSampling (Up Sampling) <d, e>	The 2 channel audio source's sampling frequency is increased to the set multiple to achieve high quality playback sound.	x1 (Off) x2 **x4**
OFILTER (Digital Filter) <d>	Switches the AUDIO DAC (Digital Audio Converter) digital filter type. One of two settings can be selected: **SLOW** (soft and warm), **SHARP** (solid and tight).	SLOW **SHARP**
PQLS (Precision Quartz Lock System)	Switches the PQLS function between AUTO and OFF (Setting the PQLS function on page 69).	**AUTO** OFF
DUAL (Dual Mono)	Specifies how dual mono encoded Dolby Digital soundtracks should be played. Dual mono is not widely used, but is sometimes necessary when two languages need to be sent to separate channels.	**CH1** – Channel 1 is heard only CH2 – Channel 2 is heard only CH1 CH2 – Both channels heard from front speakers
Fixed PCM	This is useful if you find there is a slight delay before **OFF** recognizes the PCM signal on a CD, for instance. When **ON** is selected, noise may be output during playback of non-PCM sources. Please select another input signal if this is a problem.	**OFF** ON
DRC (Dynamic Range Control) <f>	Adjusts the level of dynamic range for movie soundtracks optimized for Dolby Digital, DTS, Dolby Digital Plus, Dolby TrueHD, DTS HD and DTS-HD Master Audio (you may need to use this feature when listening to surround sound at low volumes).	**AUTO** MAX MID OFF

dry contacts

An electromagnetic device for remote or automatic control that is activated by variation in conditions of an electric circuit and that in turn operates other devices (such as switches) in the same or a different circuit.

DSX-1

Digital Signal Cross-connect Level 1. Any equipment that supports a set of parameters for cross-connecting DS-1 (either T-1 or E-1) lines.

E-1

Another name given to the CEPT (Conference of European Postal and Telecommunications Administrations) digital telephony format. E-1 is a digital transmission channel that carries data at the rate of 2.048 Mb/s (DS-1 level).

ECC

Error correction code. The code and algorithms used by logic to facilitate error detection and correction.

EISA bus

Extended Industry Standard Architecture bus. A 32-bit industry-standard I/O bus used primarily in high-end PCs and servers.

EISA Configuration Utility (ECU)

A feature of the EISA bus that helps you select a conflict- free system configuration and perform other system services. The ECU must be run whenever you change, add, or remove an EISA or ISA controller.

environment variables

The global data structures that can be accessed from console mode. The setting of these data structures determines how a system powers up, boots the operating system, and operates.

Ethernet

The IEEE 802.3 standard local area network.

firmware

The software code stored in hardware.

initialization

The sequence of steps that prepare the computer system to start. Initialization occurs after a system has been powered up.

Interrupt request lines (IRQs)

The bus signals that connect an EISA or ISA module (for example, a disk controller) to the system so that the module can get the system's attention by means of an interrupt.

ISA

Industry Standard Architecture. An 8-bit or 16-bit industry-standard I/O bus, widely used in personal computer products. The EISA bus is a superset of the ISA bus.

Downloaded from www.Manualslib.com manuals search engine

Document jams - sending

1 Push the front cover open button then open the front cover.

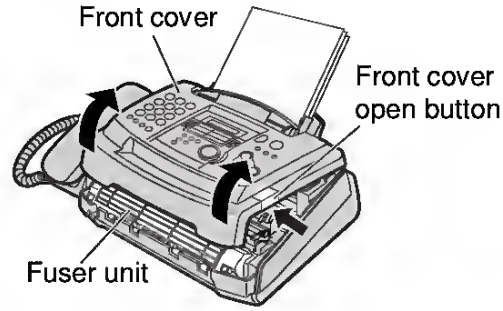

Caution:
The fuser unit gets hot.
Do not touch it.

2 Pull down the middle guide while holding the front cover.

3 Remove the jammed document carefully.

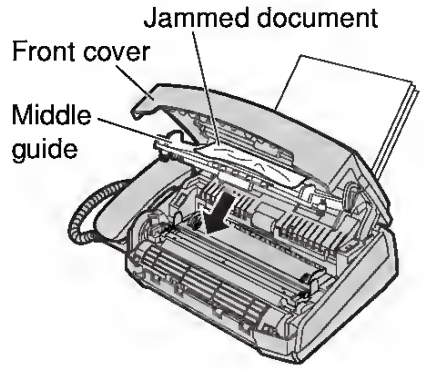

4 Lift the middle guide firmly.

5 Close the front cover, until locked, by pushing down on both sides.

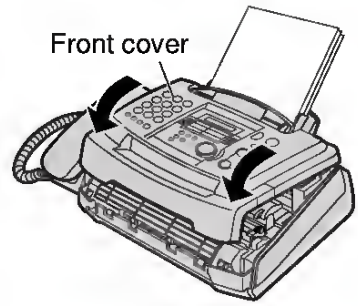

Note:

- Do not pull out the jammed document forcibly before opening the front cover.

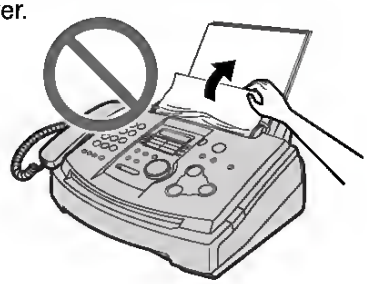

Downloaded from www.Manualslib.com manuals search engine

of your online accounts, one of the first steps you can take is to change your password.

Protect your personal information

Exercise caution when sharing personal information such as your name, home address, phone number, and email address online. To take advantage of many online services, you will inevitably have to provide personal information in order to handle billing and shipping of purchased goods. Since not divulging any personal information is rarely possible, the following list contains some advice for how to share personal information safely online:

- **Keep an eye out for phony email messages.** Things that indicate a message may be fraudulent are misspellings, poor grammar, odd phrasing, web site addresses with strange extensions, web site addresses that are entirely numbers where there are normally words, and anything else out of the ordinary. Additionally, phishing messages will often tell you that you have to act quickly to keep your account open, update your security, or urge you to provide information immediately or else something bad will happen. Don't take the bait.
- **Do not click on a link in an email**, unless you specifically asked for the email to be sent to you. If you get an email asking you to click on a link to perform an action, such as resetting your password, and you didn't ask to reset your password, type the website address into your browser by yourself.
- **Don't respond to email messages that ask for personal information.** Legitimate companies will not use email messages to ask for your personal information. When in doubt, contact the company by phone or by typing in the company web address into your web browser. Don't click on the links in these messages as they make take you to fraudulent, malicious web sites.
- **Steer clear of fraudulent web sites used to steal personal information.** When visiting a web site, type the address (URL) directly into the web browser rather than following a link within an email or instant message. Fraudsters often forge these links to make them look convincing.

  A shopping, banking or any other web site where sensitive information should have an "S" after the letters "http" (i.e. *https://*

Downloaded from www.Manualslib.com manuals search engine

4. Install tape drive into media bay.

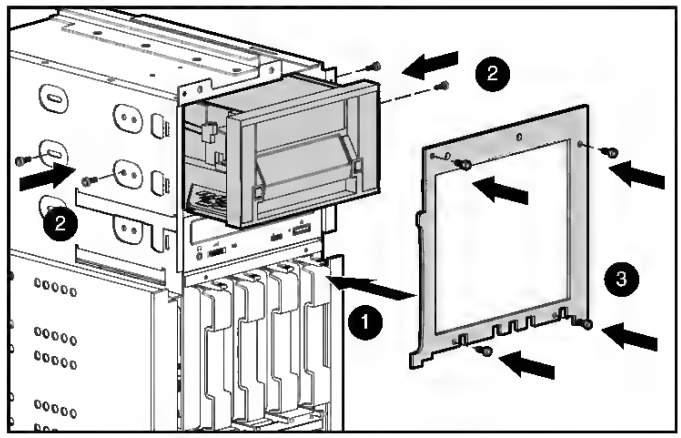

Figure 4-16 Installing tape drive

5. Install face plate.

6. Connect SCSI cable, located in the server, from the tape drive to the internal SCSI Port 1 or 2 or SCSI controller board in a PCI slot, if one is installed.

   NOTE: There are no special considerations as to which SCSI controller the tape drive is connected.

7. Install drive cage. See section "Installing Drive Cage."

Downloaded from www.Manualslib.com manuals search engine

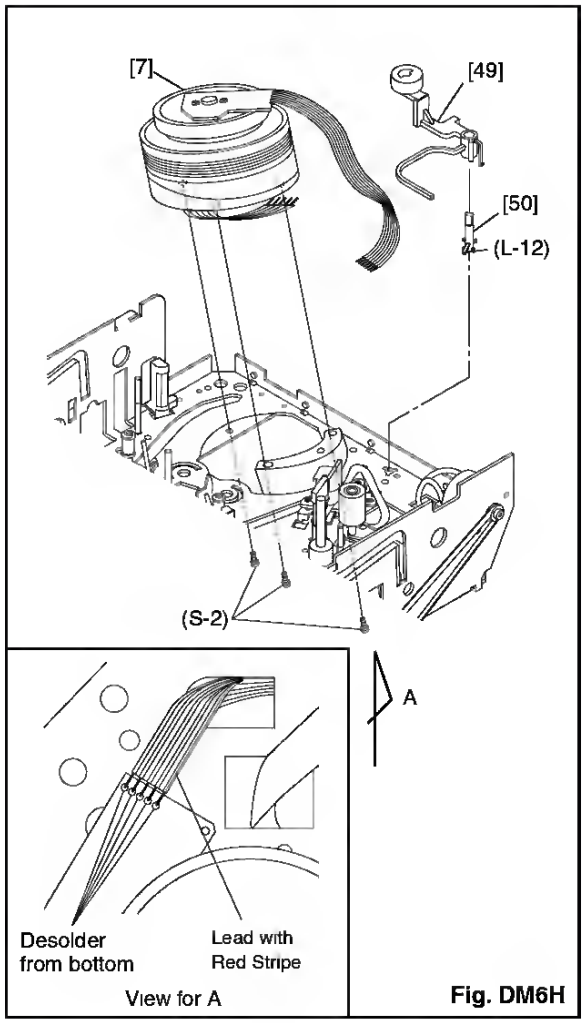

Fig. DM6H

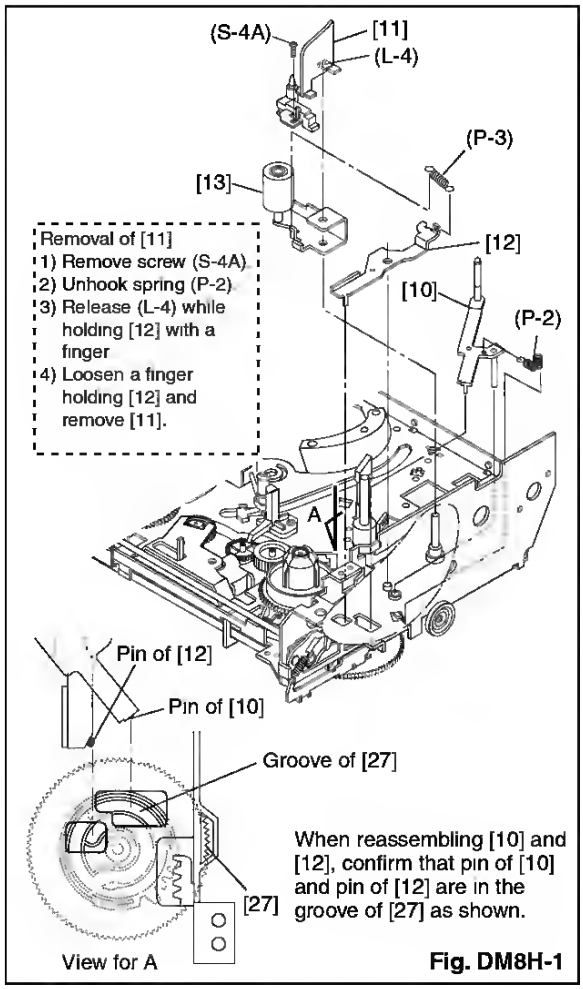

Fig. DM8H-1

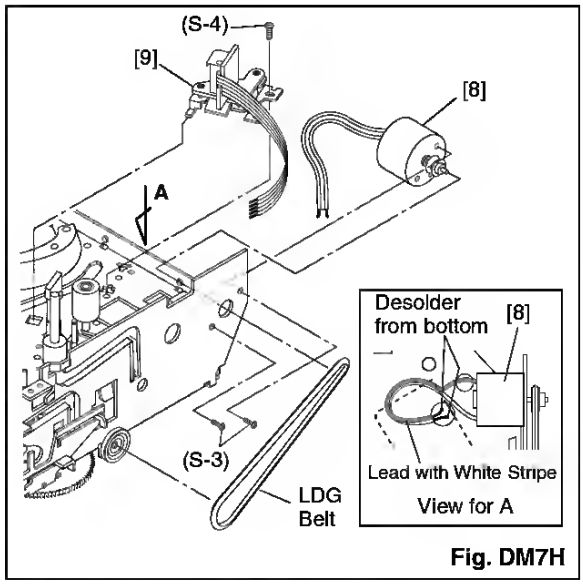

Fig. DM7H

Downloaded from www.Manualslib.com manuals search engine

END USER LICENSE AGREEMENT

IMPORTANT-READ CAREFULLY: THIS END USER LICENSE AGREEMENT ("AGREEMENT") IS A LEGAL AGREEMENT BETWEEN YOU (EITHER AN INDIVIDUAL OR A SINGLE ENTITY), AND ACER INC. INCLUDING ITS SUBSIDIARIES ("ACER") FOR THE SOFTWARE (WHETHER PROVIDED BY ACER OR BY ACER'S LICENSORS OR SUPPLIERS) THAT ACCOMPANIES THIS AGREEMENT, INCLUDING ANY ASSOCIATED MEDIA, PRINTED MATERIALS AND RELATED USER ELECTRONIC DOCUMENTATION WHICH MAY BE BRANDED "ACER" ("SOFTWARE"). AGREEMENTS RELATING TO ANY OTHER PRODUCT OR TOPIC ARE NEITHER INTENDED NOR SHOULD THEY BE IMPLIED. BY INSTALLING THE ACCOMPANYING SOFTWARE OR ANY PORTION THEREOF, YOU AGREE TO BE BOUND BY THE TERMS AND CONDITIONS OF THIS AGREEMENT. IF YOU DO NOT AGREE TO ALL OF THE TERMS AND CONDITIONS OF THIS AGREEMENT, DO NOT CONTINUE THE INSTALLATION PROCESS AND IMMEDIATELY DELETE ALL INSTALLED FILES, IF ANY, OF THE ACCOMPANYING SOFTWARE FROM YOUR PHONE.

IF YOU DO NOT HAVE A VALIDLY-LICENSED COPY OF THE APPLICABLE SOFTWARE, YOU ARE NOT AUTHORIZED TO INSTALL, COPY OR OTHERWISE USE THE SOFTWARE, AND HAVE NO RIGHTS UNDER THIS AGREEMENT.

The Software is protected by U.S. and international copyright laws and conventions as well as other intellectual property laws and treaties. The Software is licensed, not sold.

GRANT OF LICENSE

Acer grants to you the following non-exclusive and non-transferable rights with respect to the Software. Under this Agreement, you may:

1. Install and use the Software only on a single designated phone. A separate license is required for each phone on which the Software will be used;
2. Make one copy of the Software solely for backup or archival purposes;
3. Make one hardcopy of any electronic documents included in the Software, provided that you receive the documents electronically.

RESTRICTIONS

You may NOT:

1. Use or copy the Software except as provided in this Agreement;
2. Rent or lease the Software to any third party;
3. Modify, adapt, or translate the Software in whole or in part;
4. Reverse engineer, decompile, or disassemble the Software or create derivative works based upon the Software;
5. Merge the Software with any other program or modify the Software, except for your personal use; and
6. Sublicense or otherwise make the Software available to third parties, except that you may, after prior written notification to Acer, transfer the Software as a whole to a third party so long as you do not retain any copies of the Software and such third party accepts the terms of this Agreement.
7. Transfer your rights under this Agreement to any third parties.
8. Export the Software in contravention of applicable export laws and regulations, or (i) sell, export, re-export, transfer, divert, disclose technical data, or dispose of, any Software to any prohibited person, entity, or destination including, without limitation, Cuba, Iran, North Korea, Sudan and Syria; or (ii) use any Software for any use

Downloaded from www.Manualslib.com manuals search engine

10-7-3 **Hotel panel layout top**

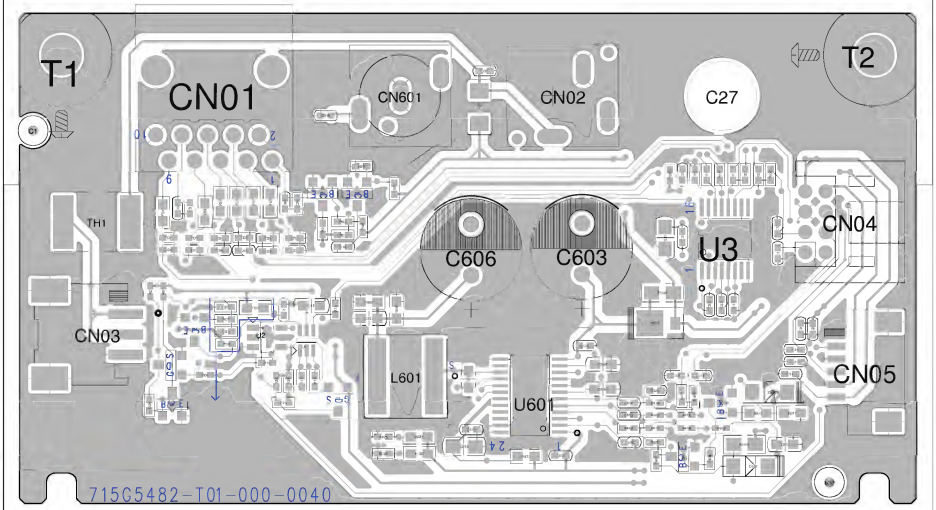

Hotel panel Layout top	71505482	

19360_502_120622.eps
120606

Interlock System

The Compaq ProLiant 5500 server interlock system prevents power distribution throughout the system if the memory board, processors, or peripheral board (including the power switch cable) are not fully installed or properly seated. The ProLiant 5500 server is not equipped with chassis interlocks; the board interlocks provided connect the memory board, processors, and peripheral board (including the power switch cable) in one interlock chain. When one of the connected components in the interlock chain is improperly seated in the connector, the LED associated with the fault origination point will illuminate. See Chapter 1 for details regarding the interlock error.

WARNING: Care must be exercised when the hood or side covers are removed because the system does not shut down automatically.

Accessing the Drive Cage Back Plane

These instructions cover the removal of the simplex drive cage and the installation of the Duplex drive cage. This procedure enables controller duplexing of the internal SCSI drives. Refer to the Chapter 7 for more information on configuring duplex and simplex modes.

1. Remove the side cover as shown in Figure 4-1.
2. Remove the fans and all cables to the fans.

CAUTION: Never power up the server if the fans have been removed from either the processor or I/O section. Overheating and damage to hardware could result.

Writer: Salvo Project: Compaq ProLiant 5500 Servers Setup and Installation Guide Comments: 328470-001\July 1998
Downloaded from www.Manualslib.com manuals search engine
File Name: E-CH04.DOC Last Saved On: 7/13/98 8:13 AM

2. Enter the text to search for in the **for** field.
3. Click **search**.

TIP: Click **reset** to clear the text field and to refresh the display to show all accounts after a search.

Sorting the User Account Area

To sort the user account area:

NAC 800 Home window>>System configuration>>User accounts

Click the column heading for **user id**, **full name**, **email address**, **user roles**, or **clusters**. The user accounts reorder according to the column heading selected. Click the column heading again to change from ascending to descending.

Copying a User Account

To copy a user account:

NAC 800 Home window>>System configuration>>User accounts

E700 Label for Handset System Device Label(US Generic)

For Generic Sku US Band (FCC only support US band)
Material: 防火PET
Printing: Black
Size: 58.00 x 70.00 mm
PN:702703823641

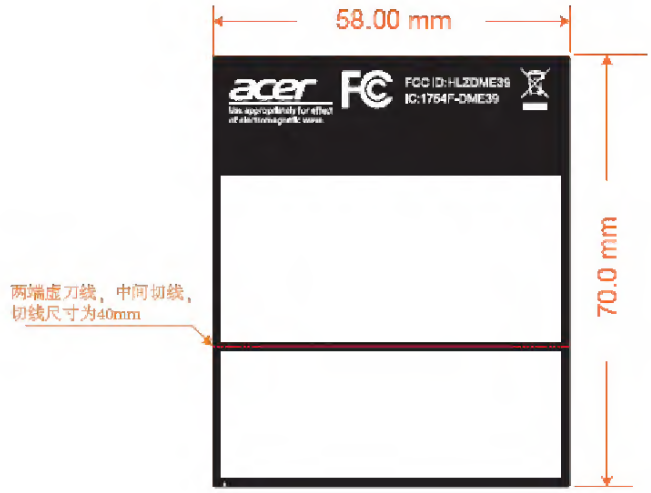

One SIM

Three SIM

Downloaded from www.Manualslib.com manuals search engine

Running the Utilities from Diskette

- Run the utilities from their individual diskettes. If you have a utility diskette newer than the version on the SmartStart and Support Software CD, use that diskette.
- Create a diskette version of the utility from the SmartStart and Support Software CD.

To create diskette versions of the utilities from the CD:

1. Start the Compaq SmartStart and Support Software CD.
2. From the Compaq System Utilities screen, select Create Support Software Disks, and then select Next.
3. Select the diskette you would like to create from the list, and then follow the instructions on the screen.

Running the Utilities from the Compaq SmartStart and Support Software CD

IMPORTANT: Only the System Configuration Utility, the Array Configuration Utility, and the Array Diagnostic Utility (ADU) can be executed from the SmartStart and Support Software CD. All other utilities must be executed from either the system partition or from diskette.

To run these utilities directly from the SmartStart and Support Software CD:

1. Start the SmartStart and Support Software CD.
2. From the System Utilities screen, select the utility you wish to run, and then select Next.
   - To execute the System Configuration Utility, select Run System Configuration Utility.
   - To execute the Array Configuration Utility, select Run Array Configuration Utility.
   - To execute the Array Diagnostic Utility (ADU), select Run Array Diagnostic Utility.

Downloaded from www.Manualslib.com manuals search engine